# LAND ROVER 88 Series IIA Station Wagon

AK

**1/35 SCALE** **AK35013**



## CAUTION

- Glue and paint should always be used in a well-ventilated area. Avoid any open flames. Glue and paint are not included.
- This product is intended for ages 14 to adult, younger children may only assemble it under adult supervision. Those who will assemble the model or supervise the process, are advised to carefully study the user manual before starting the assembly process.
- Please be careful with the tips of tools and parts. Pay special attention to photo-etched parts to avoid scratch or injury. Keep the parts and plastic bags away from children, pets or anyone who needs special care.
- Please check the symbology below and familiarise yourself before building this model kit.

## PRECAUCIÓN

- El pegamento y la pintura siempre deben usarse en un lugar bien ventilado. Evite proximidad a cualquier llama. Pegamento y pintura no incluidos.
- Este producto está diseñado para personas de 14 años en adelante, los niños más pequeños solo pueden montarlo bajo supervisión de un adulto. Para quienes monten el modelo o supervisen el proceso, se recomienda estudiar cuidadosamente el manual de instrucciones antes de iniciar el proceso de montaje.
- Tenga cuidado con las puntas de las herramientas y las piezas. Preste especial atención a los fotograbados para evitar rasguños o lesiones. Mantenga las piezas y las bolsas de plástico alejadas de niños, mascotas o cualquier persona que necesite cuidados especiales.
- Verifique la siguiente simbología y familiarícese con ella antes de construir este modelo.

| | | | | | |
|---|---|---|---|---|---|
| SEPARATELY BUILT SUB-ASSEMBLY<br>*CONSTRUCCIÓN POR SEPARADO SUB-ENSAMBLADO* | MAKE 2PCS<br>*HACER 2* | BEND<br>*DOBLAR* | REMOVE<br>*QUITAR* | DRILL HOLE<br>*TALADRAR* | FILL HOLE<br>*RELLENAR AGUJERO* |
| DO NOT GLUE<br>*NO PEGAR* | USE GLUE FOR METAL<br>*USAR PEGAMENTO INSTANTÁNEO PARA METAL* | WAIT UNTIL DRY<br>*ESPERAR SECADO* | OPTIONAL<br>*OPCIONAL* | APPLY DECAL<br>*APLICAR CALCA* | MARKING OPTION<br>*OPCIÓN DE MARCADO* |

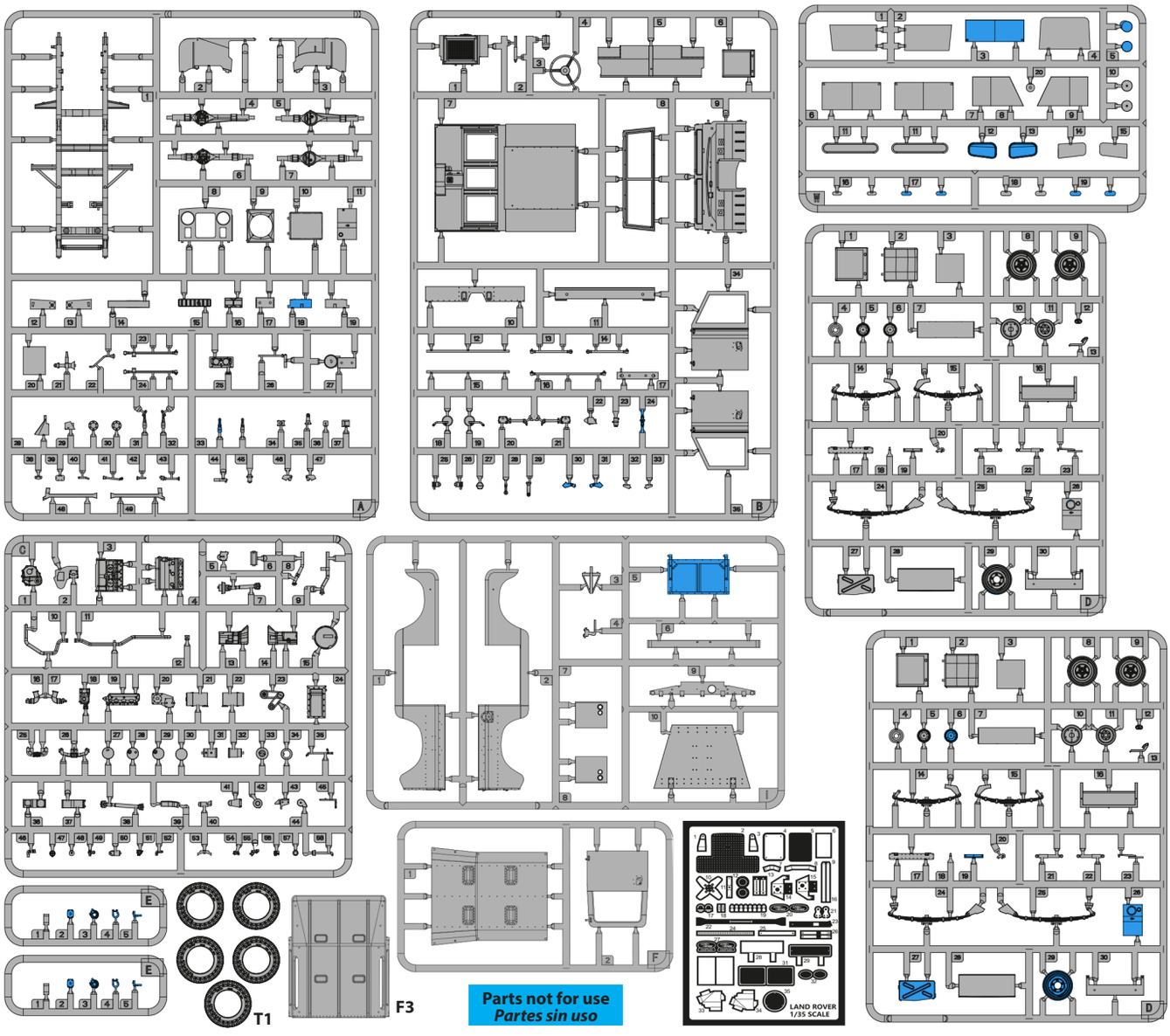


| | Nombre del color / Color name | AK-Interactive Real Colors | AK-Interactive Acrylics |
|---|---|---|---|
| | Aluminium | RC020 | AK11207 |
| | Off White | RC013 | AK11002 |
| | Flat White | RC004 | AK11001 |
| | Flat Black | RC001 | AK11029 |
| | Tire Black | RC022 | AK11027 |
| | Pale Green | RC232 | AK11311 |
| | Grey | RC255 | AK11866 |
| | Grey Vinyl Leather | RC261 | AK11862 |
| | Golden Yellow | RC007 | AK11043 |
| | Signal Red | RC005 | AK11089 |
| | Clear Orange | RC506 | AK11218 |
| | Clear Red | RC503 | AK11213 |
| | RAF Blue-Grey | RC208 | AK11167 |
| | Middle Graphite | RC257 | AK11190 |
| | Olive Green | RC209 | AK11874 |
| | Light Stone | RC040 | AK11377 |
| | Limestone | RC222 | AK11004 |
| | Pacific Blue | RC011 | AK11185 |
| | IDF Early Sand Yellow | RC096 | AK11354 |
| | Red | RC006 | AK11890 |
| | IDF Sand Grey 1970s-1980s | RC095 | AK11353 |
| | Pale Blue | RC240 | AK11161 |
| | | **AK-Interactive Xtreme Metal** | |
| | Dark Iron | AK486 | |
| | Matte Aluminium | AK488 | |
| | Steel | AK476 | |
| | Titanium | AK669 | |

## 1

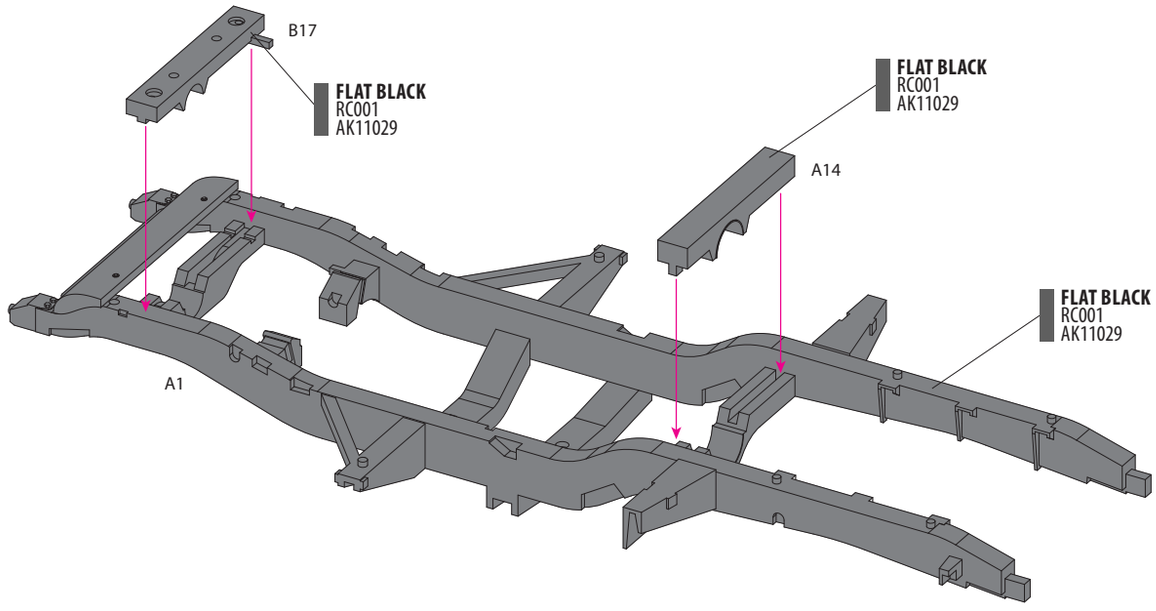
B17
FLAT BLACK
RC001
AK11029
FLAT BLACK
RC001
AK11029
A14
FLAT BLACK
RC001
AK11029
A1

## 2

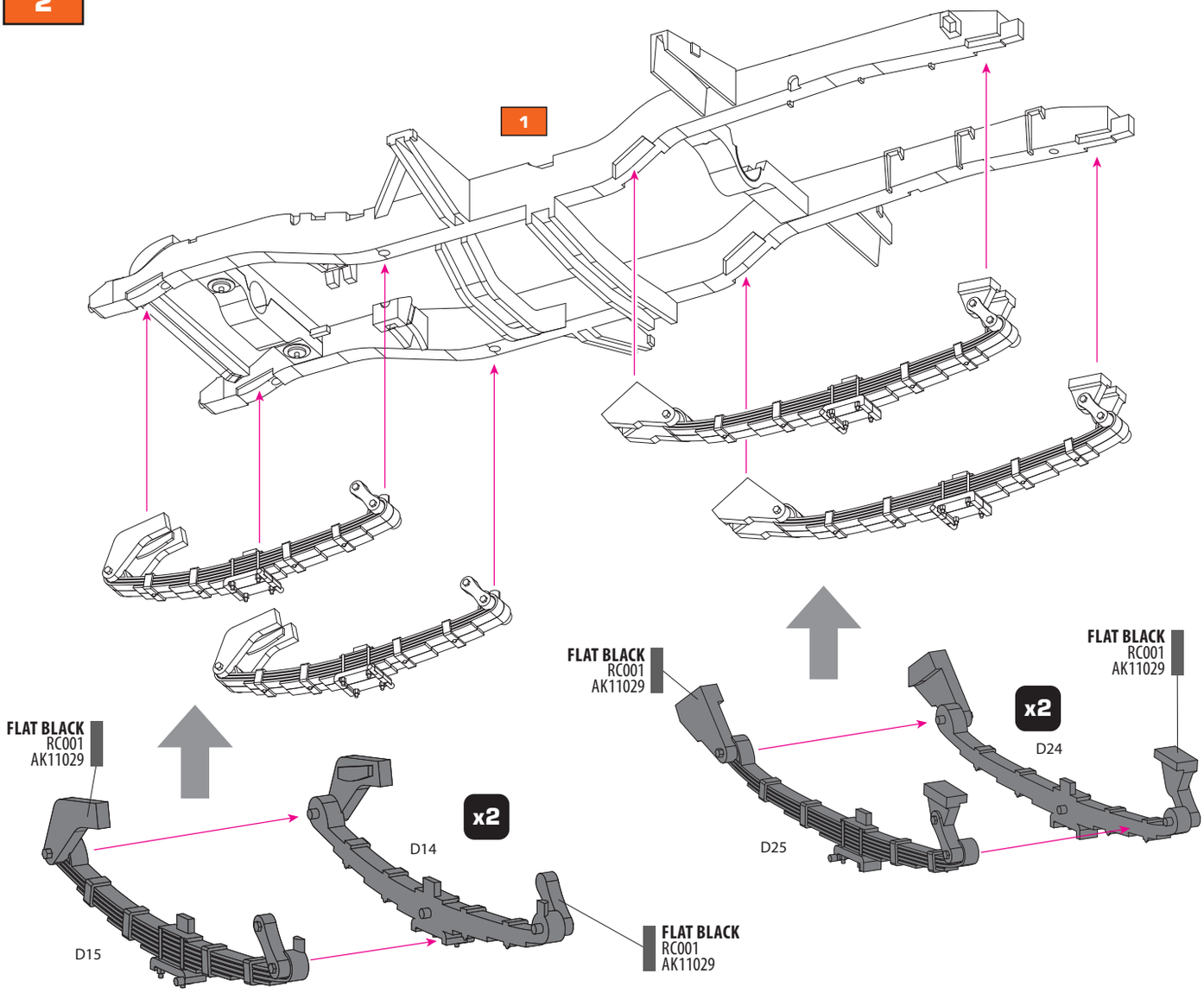
1
FLAT BLACK
RC001
AK11029
x2
D14
D15
FLAT BLACK
RC001
AK11029
FLAT BLACK
RC001
AK11029
x2
D24
D25
FLAT BLACK
RC001
AK11029

## 3

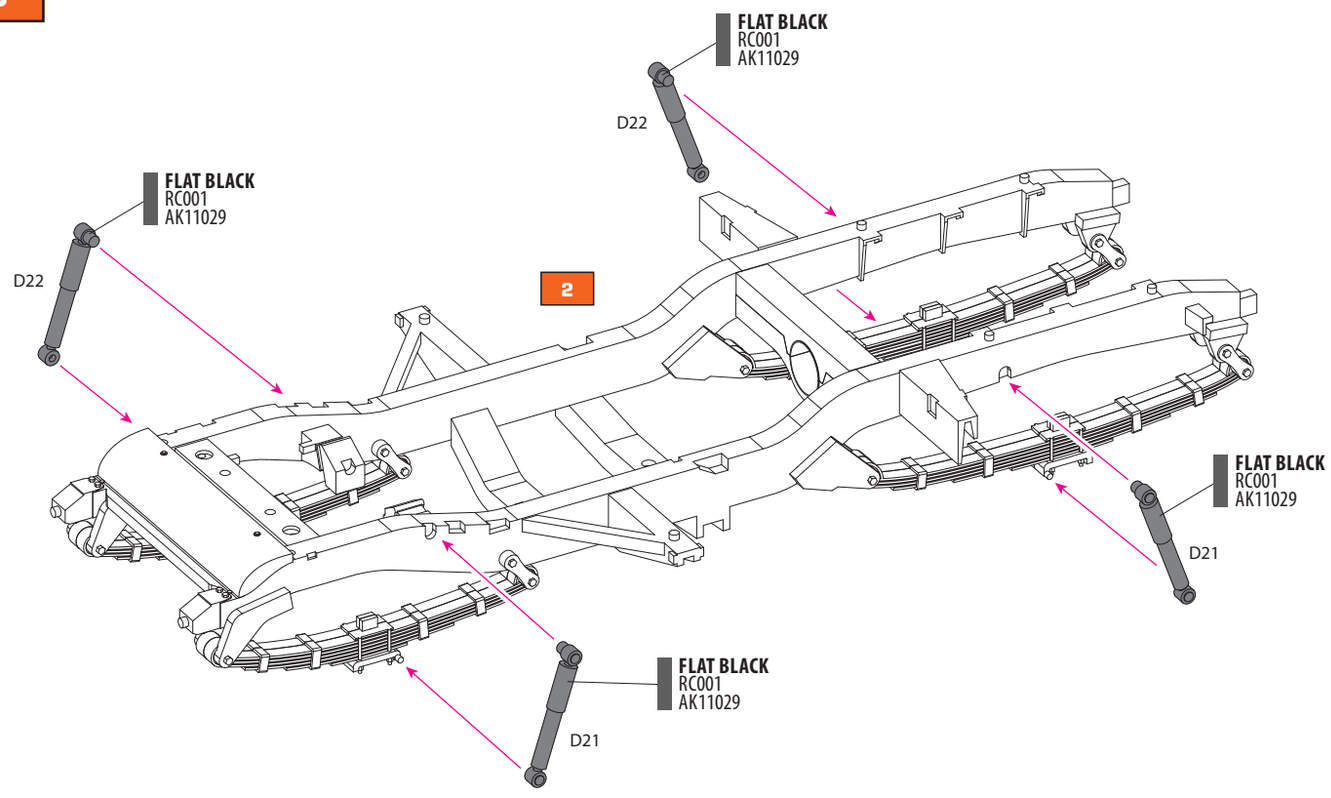
FLAT BLACK
RC001
AK11029
D22
FLAT BLACK
RC001
AK11029
D22
2
FLAT BLACK
RC001
AK11029
D21
FLAT BLACK
RC001
AK11029
D21

## 4

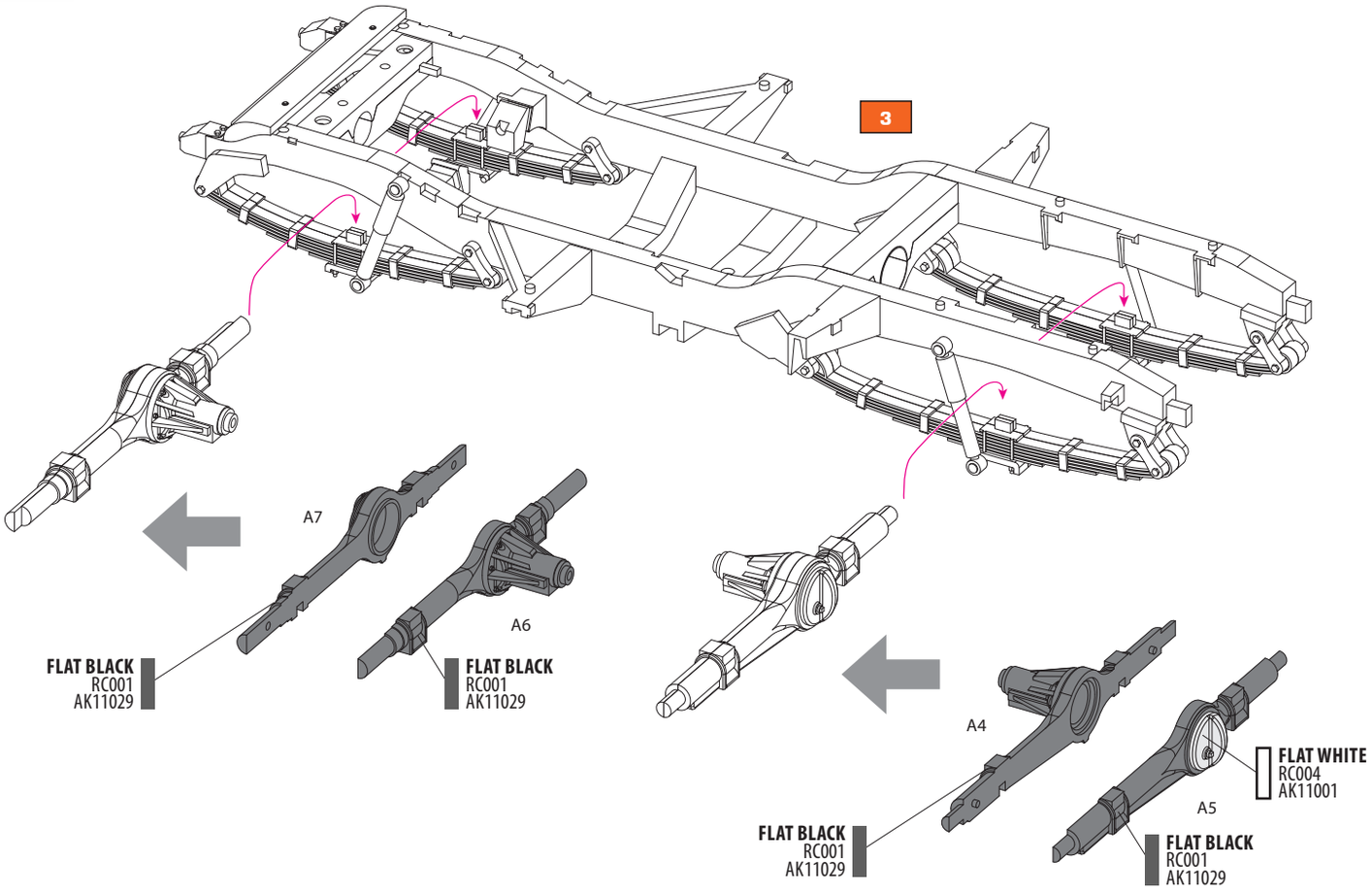
3
A7
A6
FLAT BLACK
RC001
AK11029
FLAT BLACK
RC001
AK11029
A4
A5
FLAT WHITE
RC004
AK11001
FLAT BLACK
RC001
AK11029
FLAT BLACK
RC001
AK11029

## 5

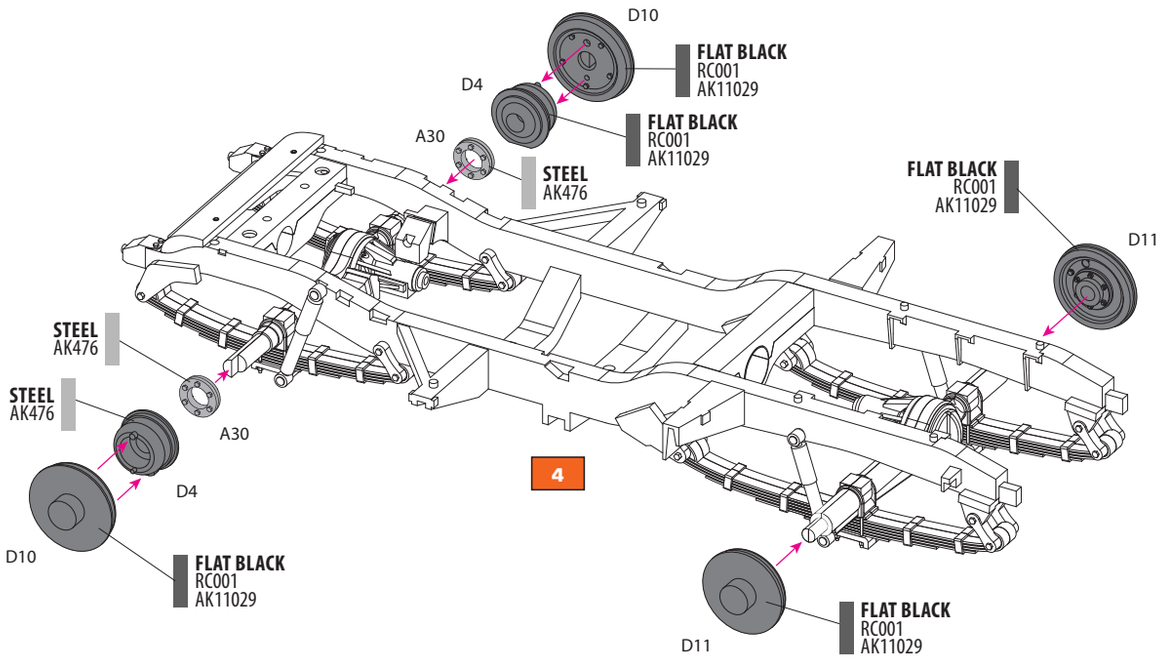
D10
FLAT BLACK
RC001
AK11029
D4
FLAT BLACK
RC001
AK11029
A30
STEEL
AK476
FLAT BLACK
RC001
AK11029
D11
STEEL
AK476
STEEL
AK476
A30
D4
D10
FLAT BLACK
RC001
AK11029
4
D11
FLAT BLACK
RC001
AK11029

## 6

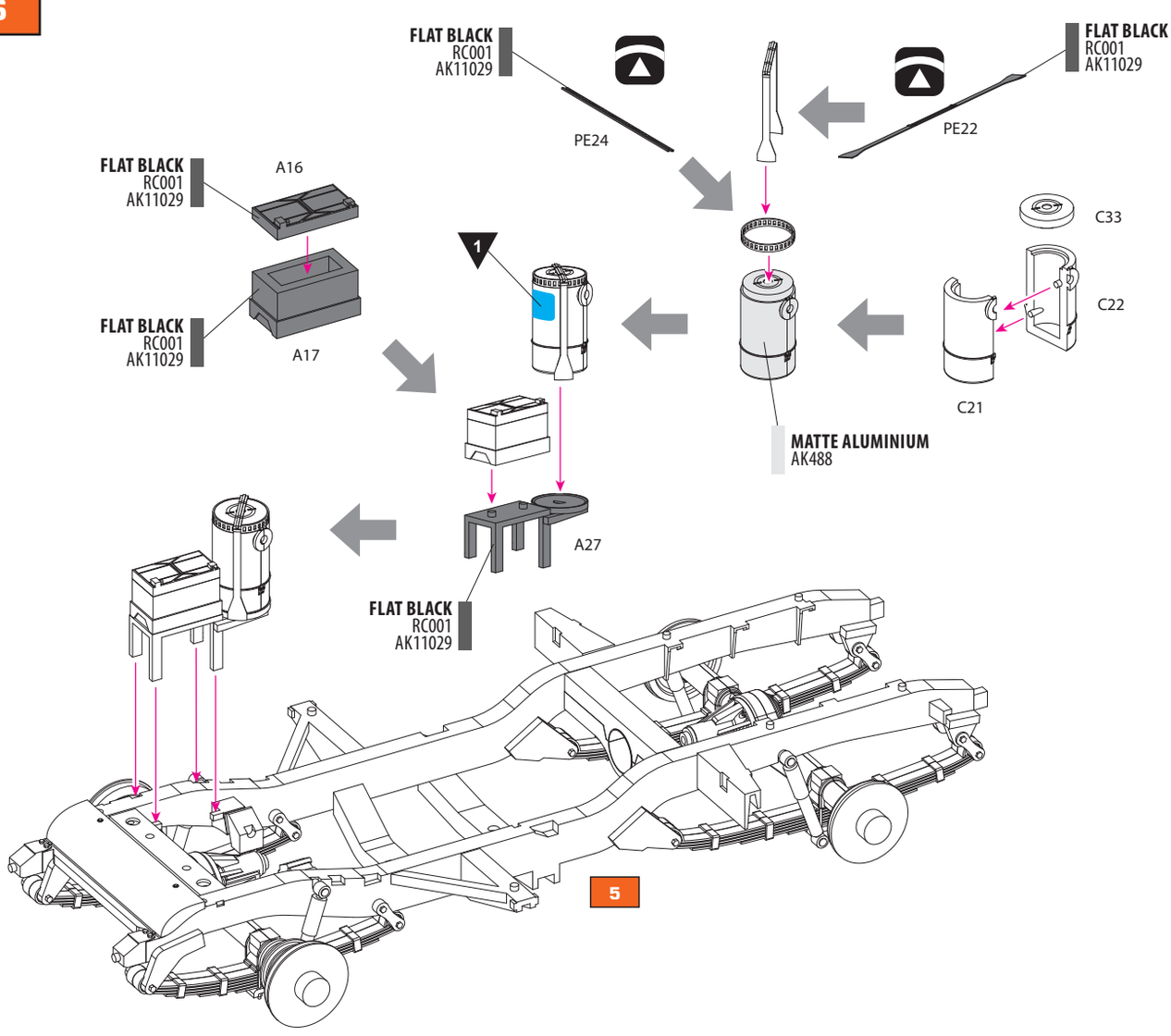
FLAT BLACK
RC001
AK11029
PE24
PE22
FLAT BLACK
RC001
AK11029
FLAT BLACK
RC001
AK11029
A16
FLAT BLACK
RC001
AK11029
A17
1
C33
C22
C21
MATTE ALUMINIUM
AK488
A27
FLAT BLACK
RC001
AK11029
5

## 7

ORIGINAL EXTERNAL BASE COLOUR

B D F G
LIMESTONE
RC222
AK11004

A
RAF BLUE-GREY
RC208
AK11167

C
PACIFIC BLUE
RC011
AK11185

E
RED
RC006
AK11090

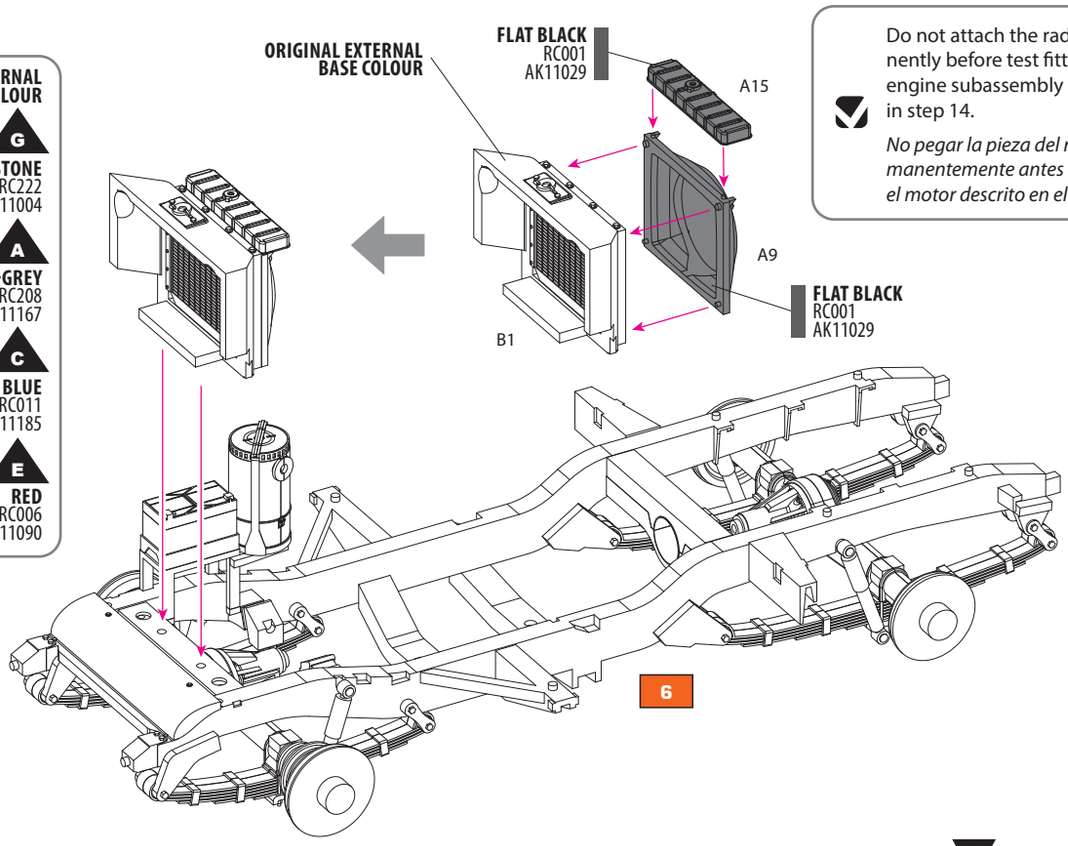


Do not attach the radiator permanently before test fitting the entire engine subassembly as illustrated in step 14.

*No pegar la pieza del radiadorpermanentemente antes de ensamblar el motor descrito en el paso 14.*

## 8

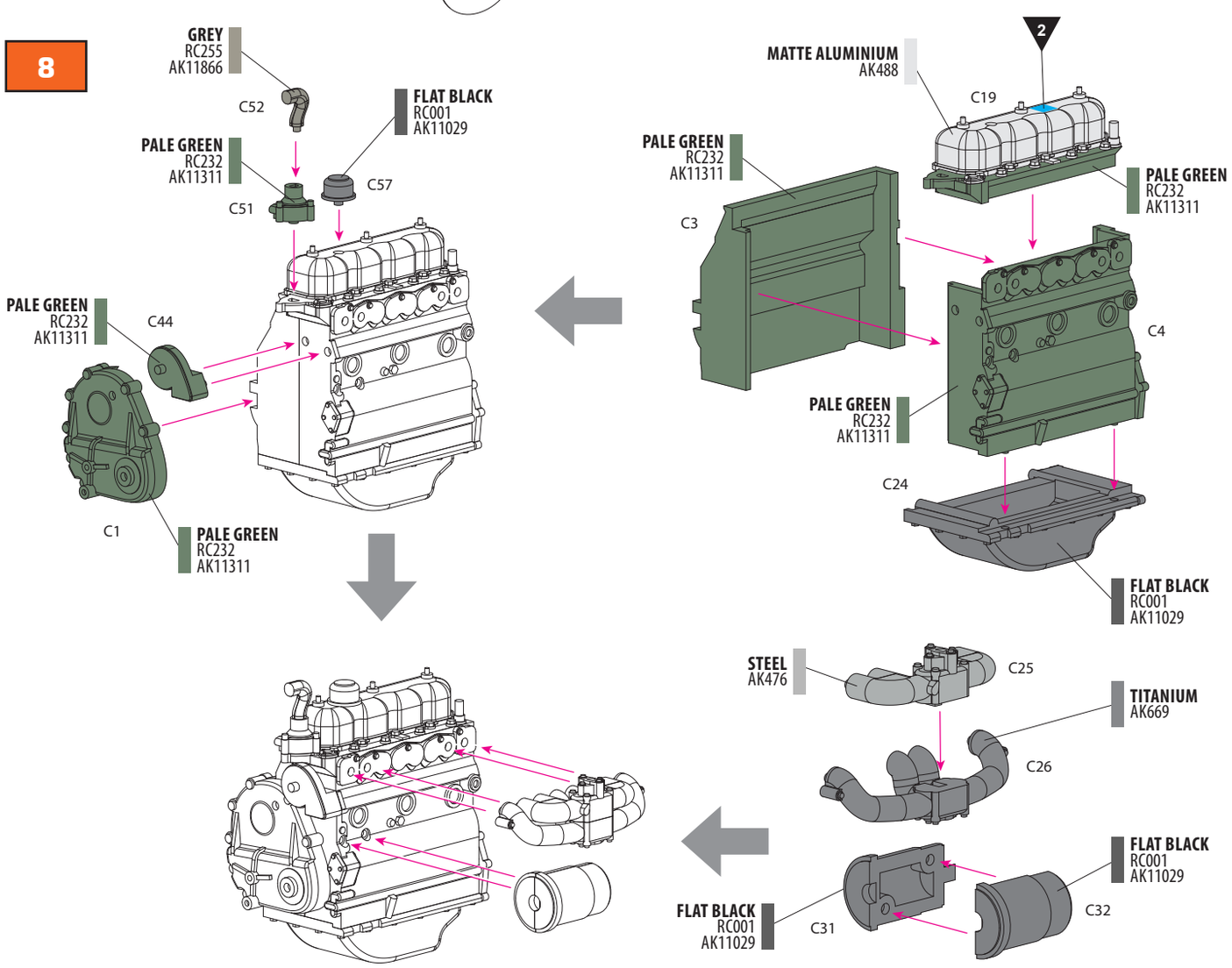

## 9

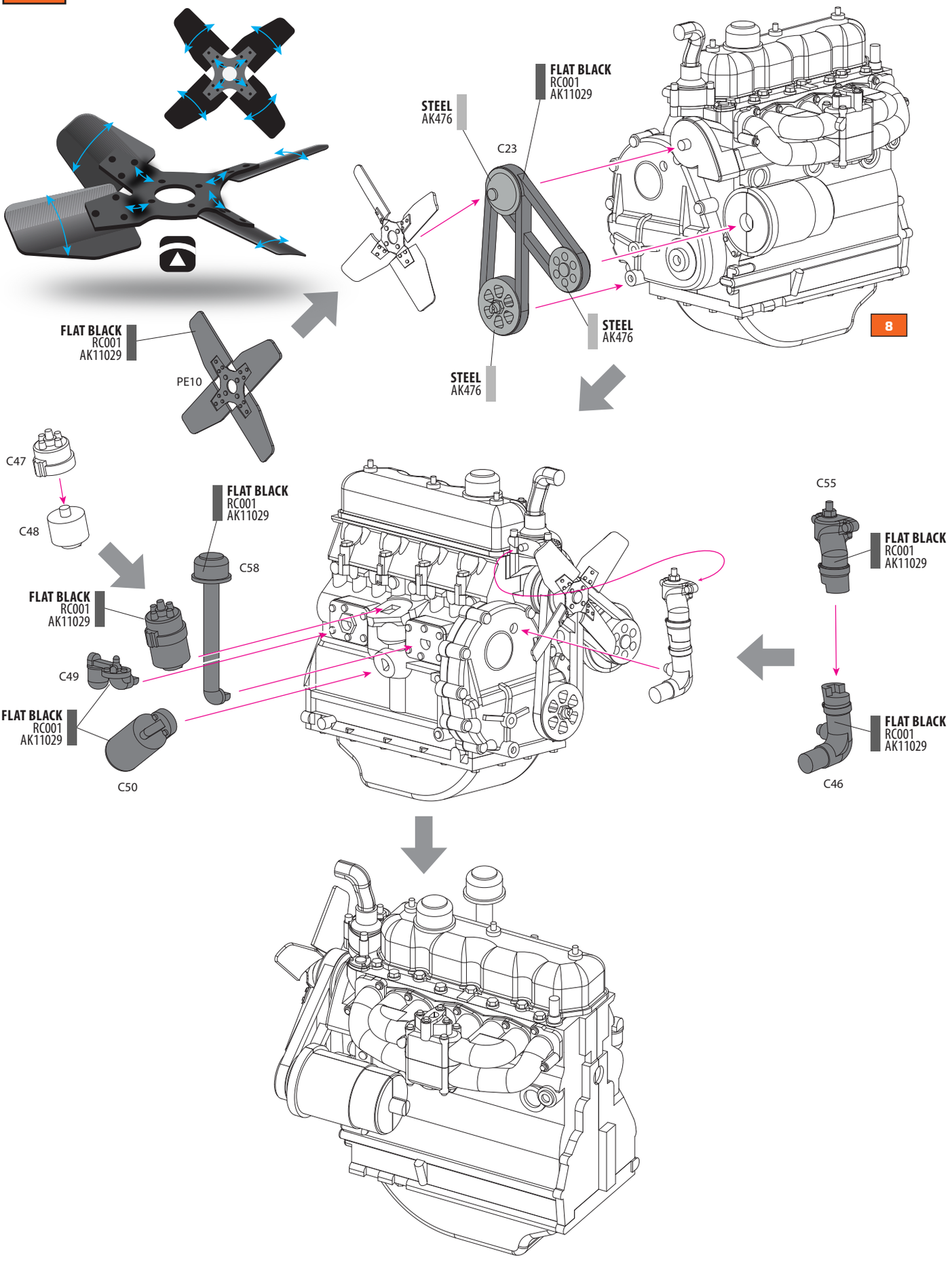
FLAT BLACK
RC001
AK11029
STEEL
AK476
C23
FLAT BLACK
RC001
AK11029
STEEL
AK476
8
PE10
FLAT BLACK
RC001
AK11029
STEEL
AK476
C47
C48
FLAT BLACK
RC001
AK11029
C58
FLAT BLACK
RC001
AK11029
C49
FLAT BLACK
RC001
AK11029
C50
C55
FLAT BLACK
RC001
AK11029
FLAT BLACK
RC001
AK11029
C46

**10**

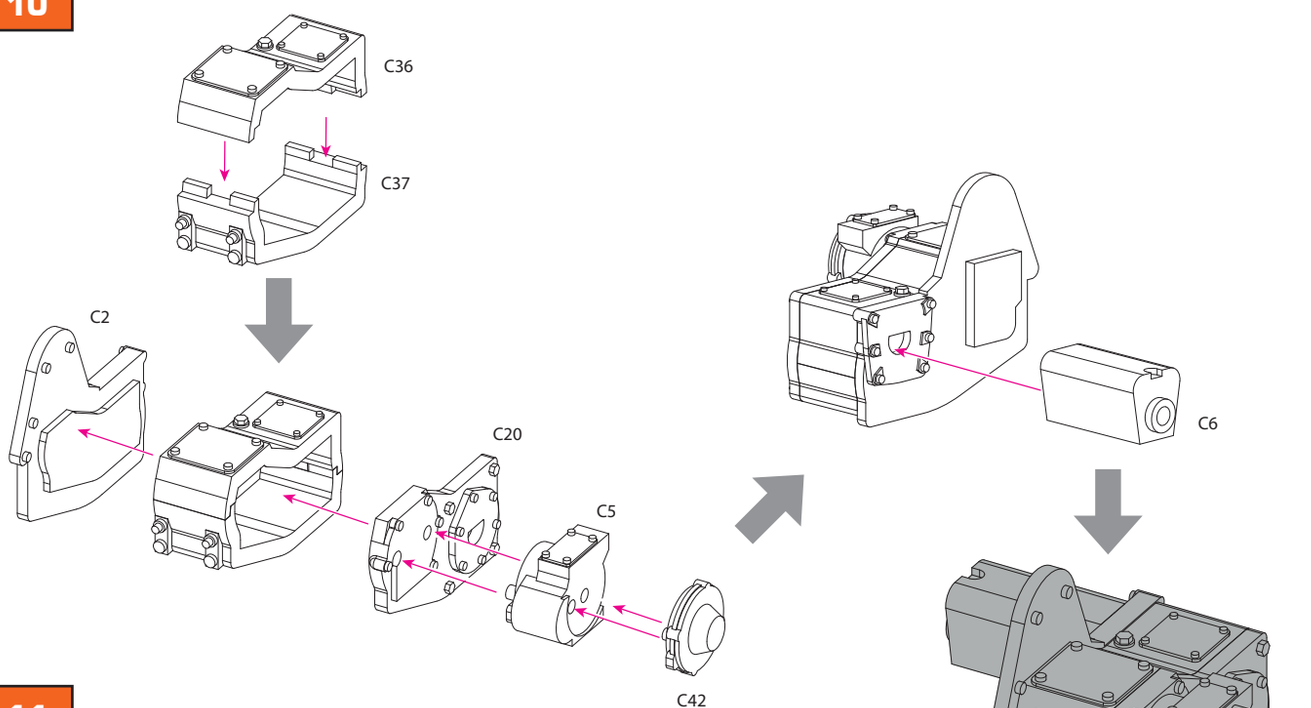
C36
C37
C2
C20
C5
C42
C6
STEEL
AK476

**11**

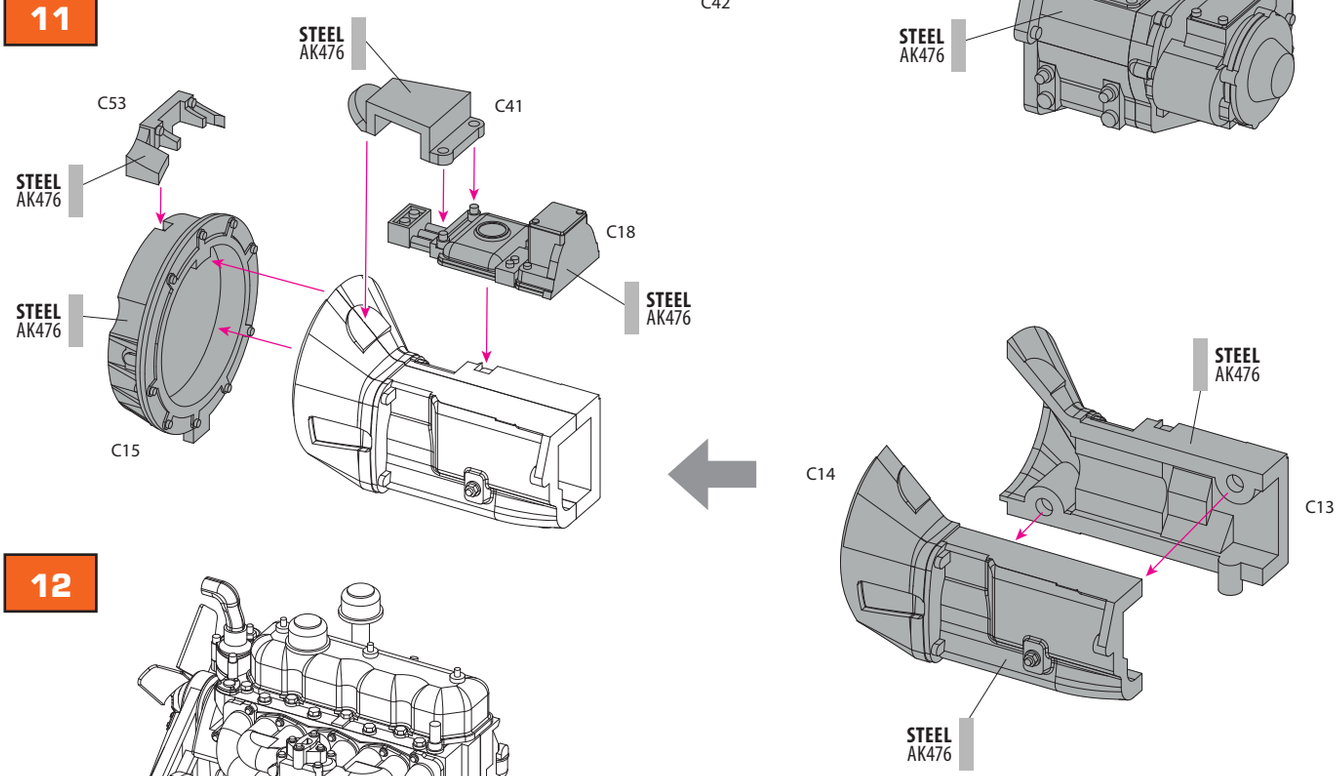
STEEL
AK476
C41
C53
STEEL
AK476
C18
STEEL
AK476
STEEL
AK476
C15
STEEL
AK476
C14
C13
STEEL
AK476

**12**

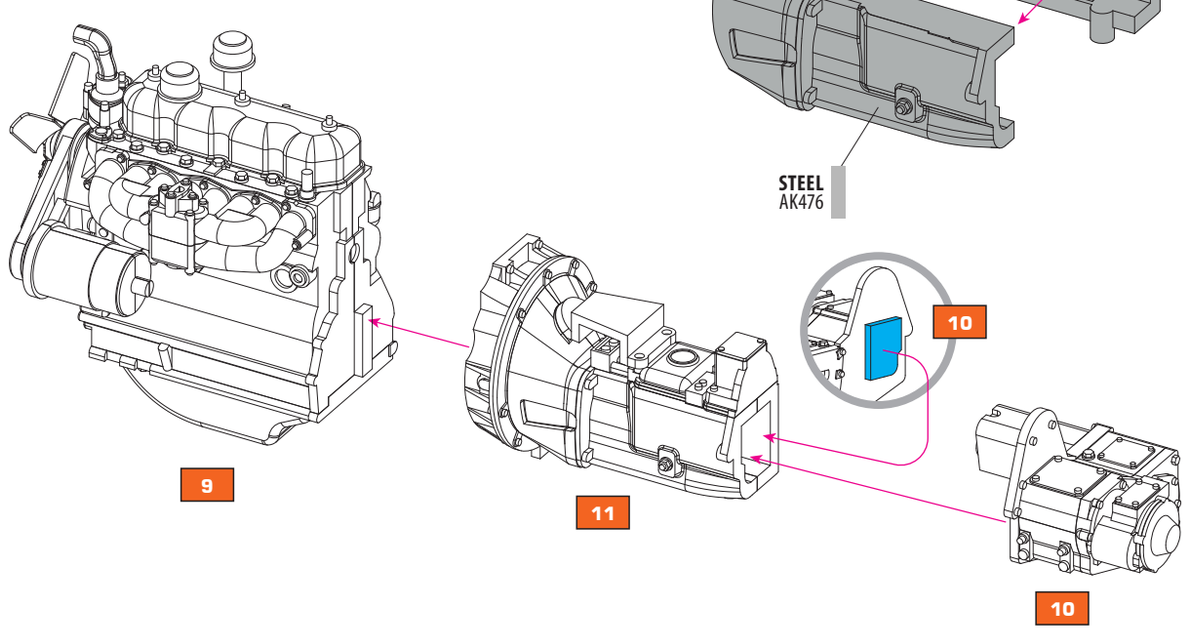
9
11
10
10

## 13

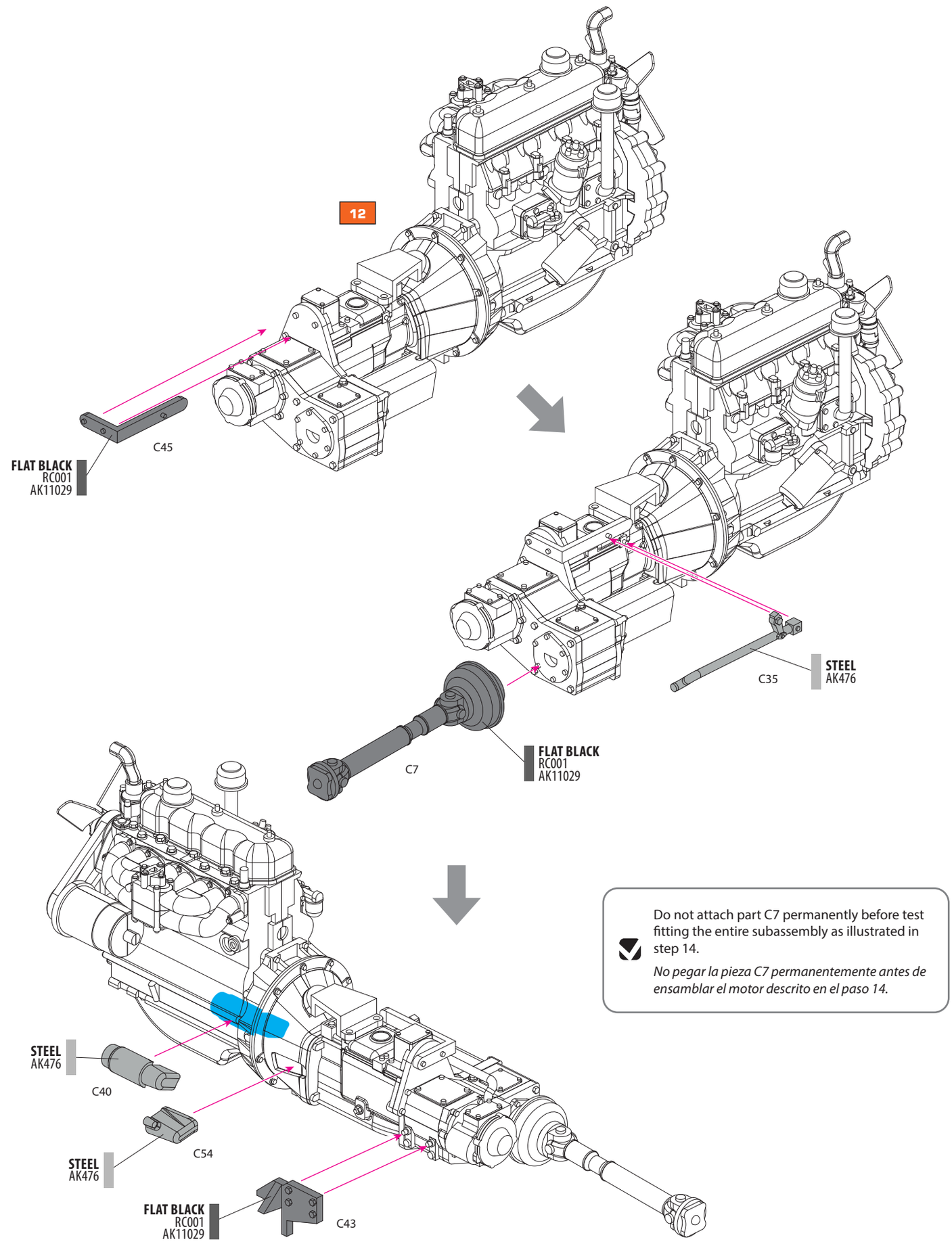


Do not attach part C7 permanently before test fitting the entire subassembly as illustrated in step 14.

*No pegar la pieza C7 permanentemente antes de ensamblar el motor descrito en el paso 14.*

**14**

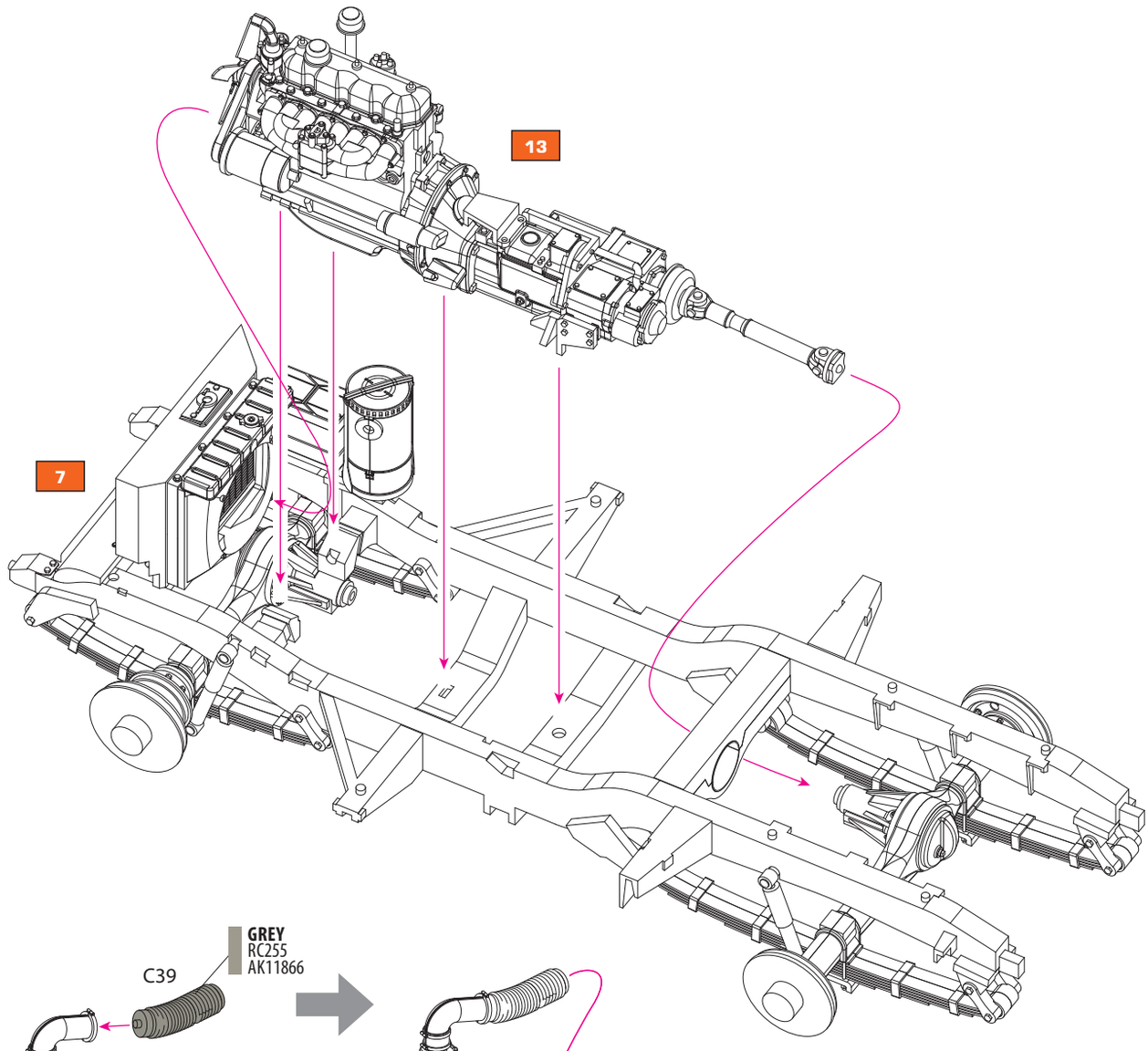
13
7

**15**

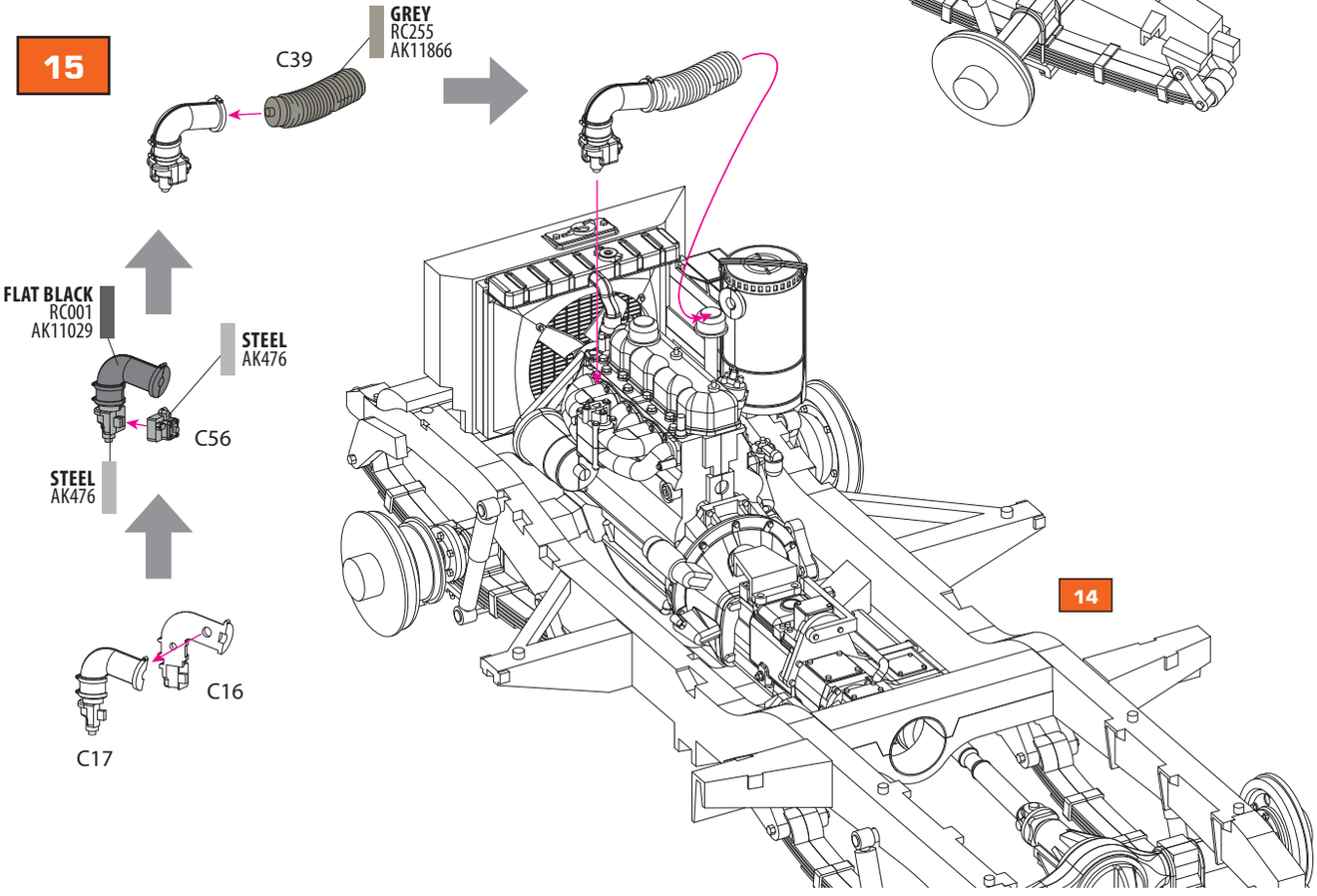
GREY
RC255
AK11866
C39
FLAT BLACK
RC001
AK11029
STEEL
AK476
C56
STEEL
AK476
C16
C17
14

## 16

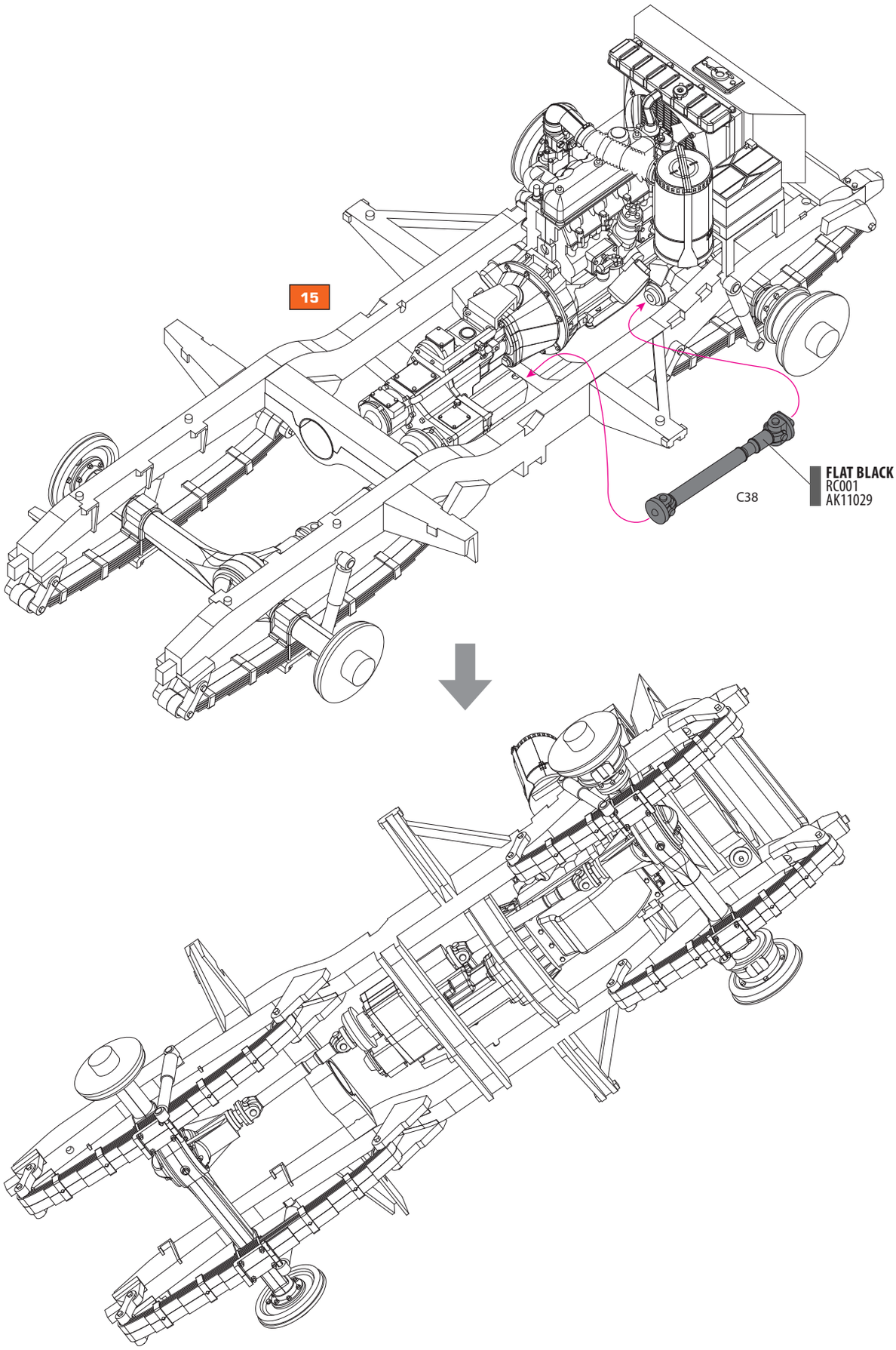

**17A** **Right hand drive steering**
***Op. volante al lado derecho***

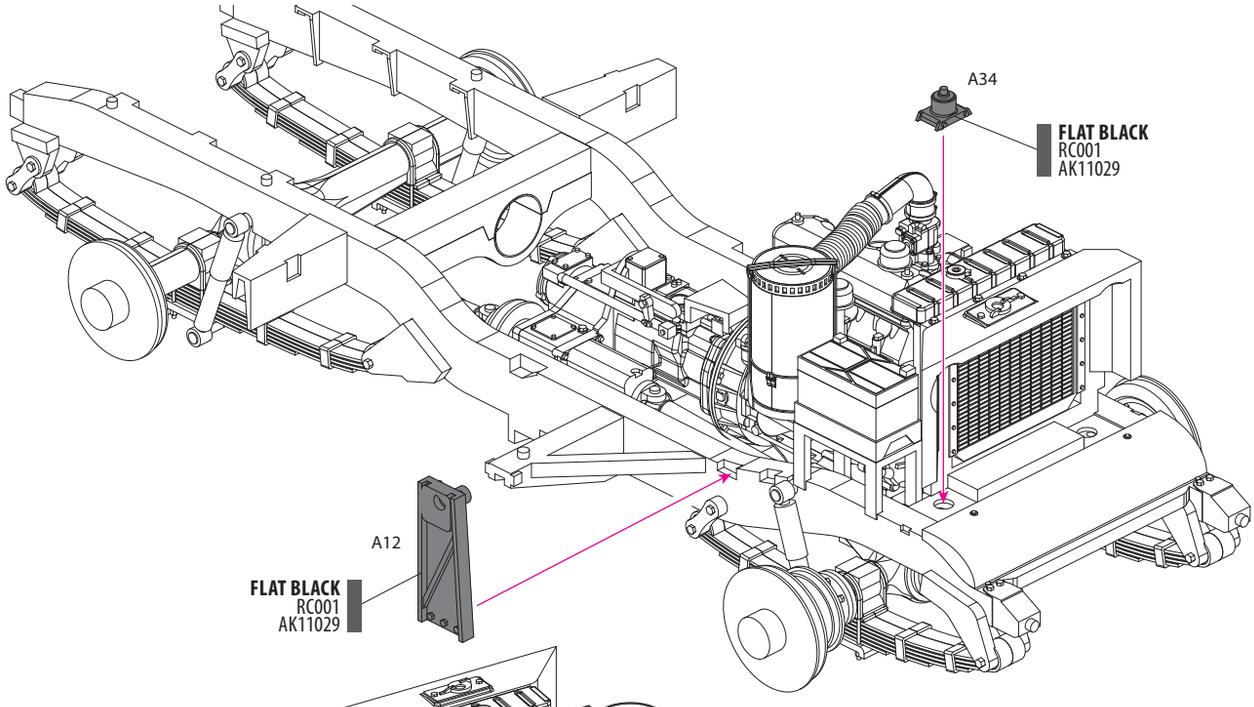


**18A**

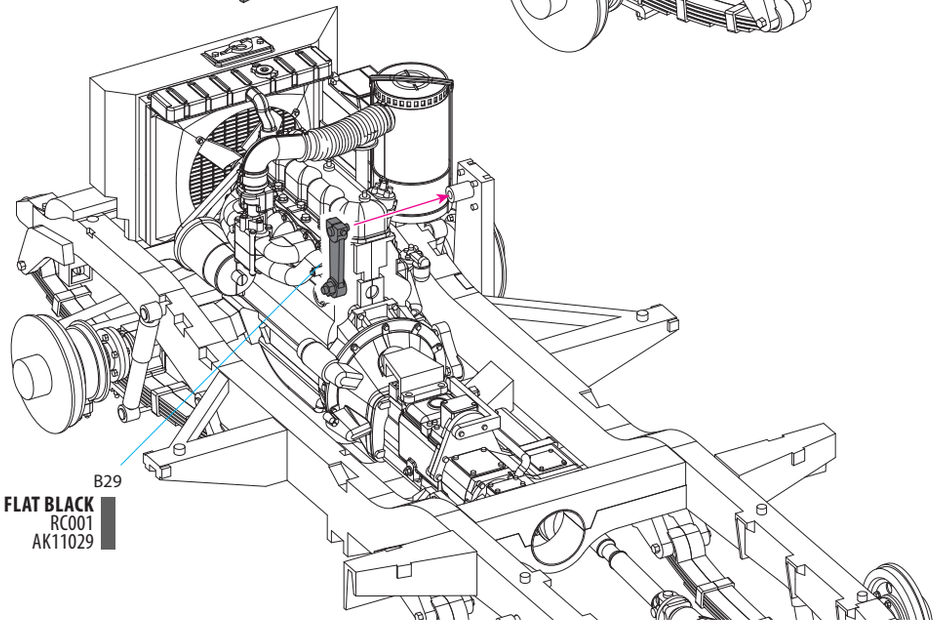


**19A**

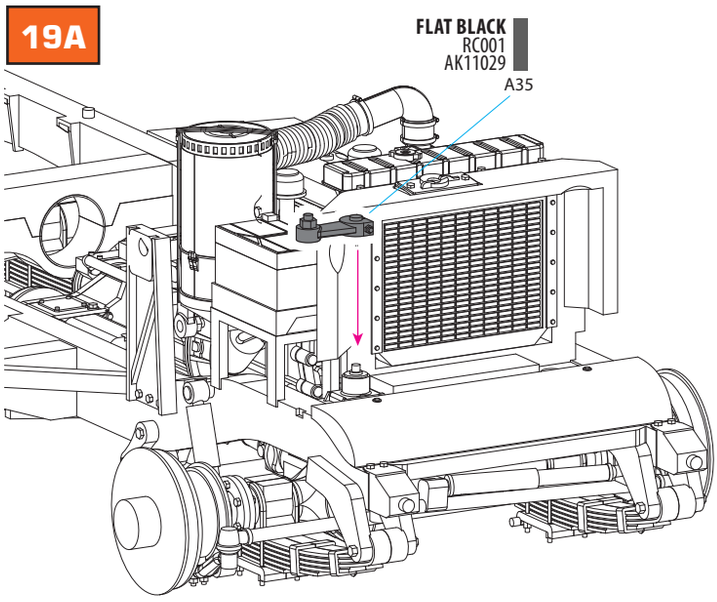


**20A**

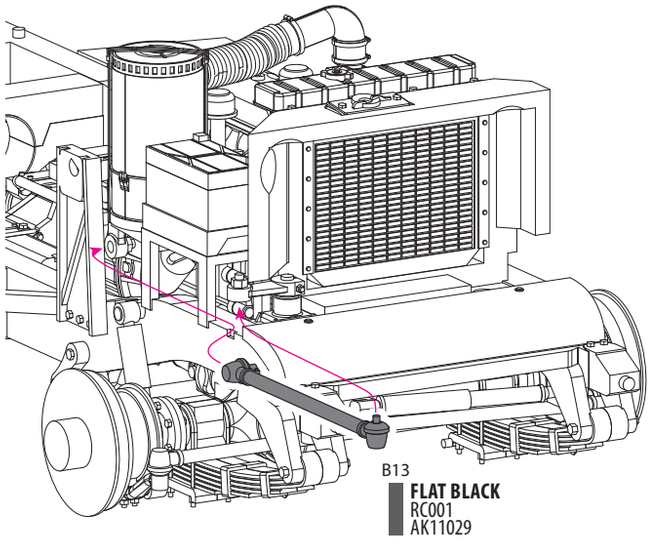

## 21A

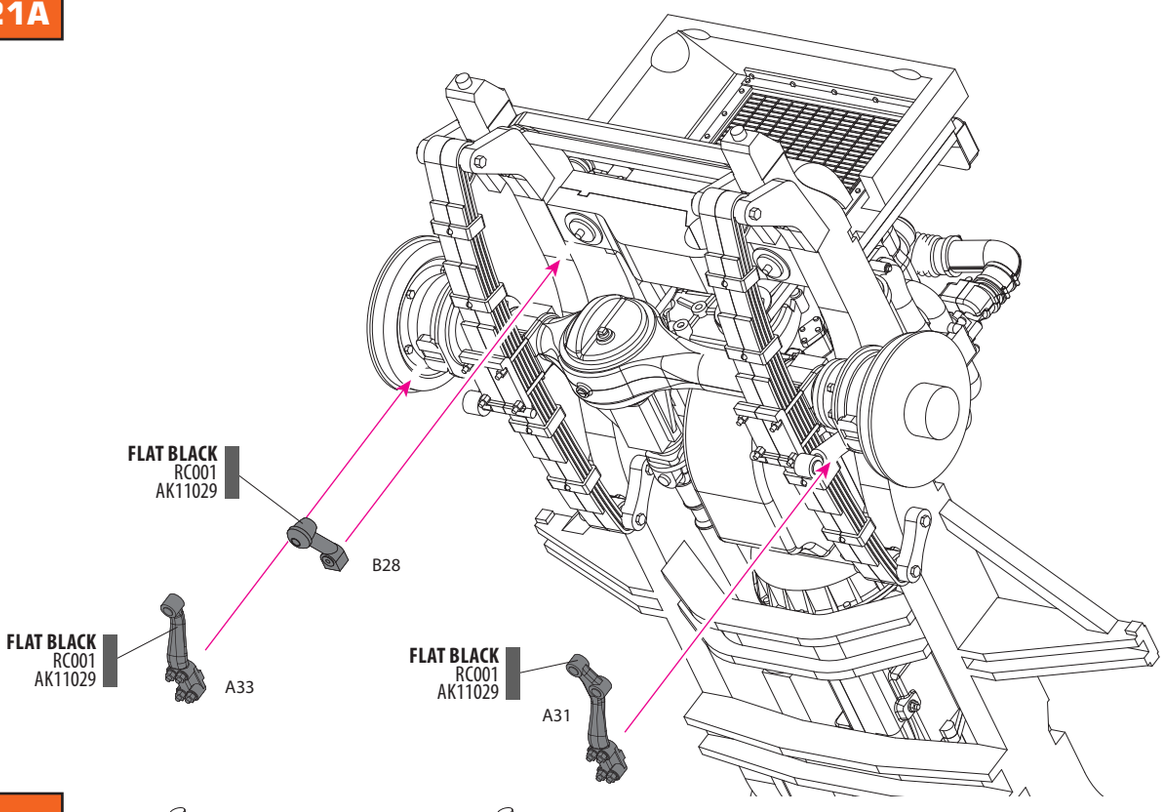


## 22A

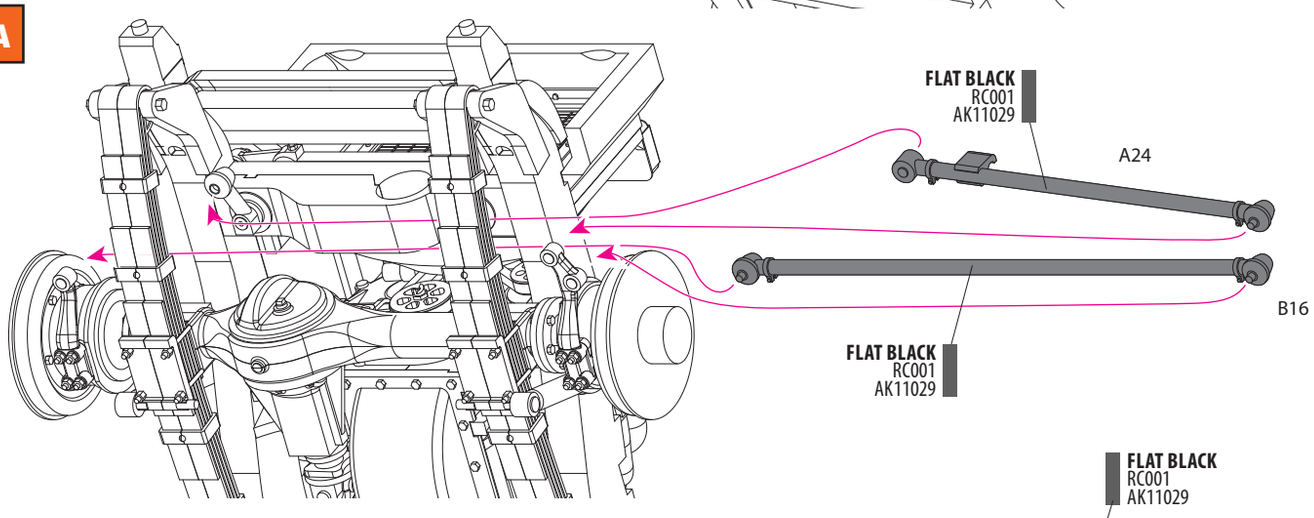


## 23A

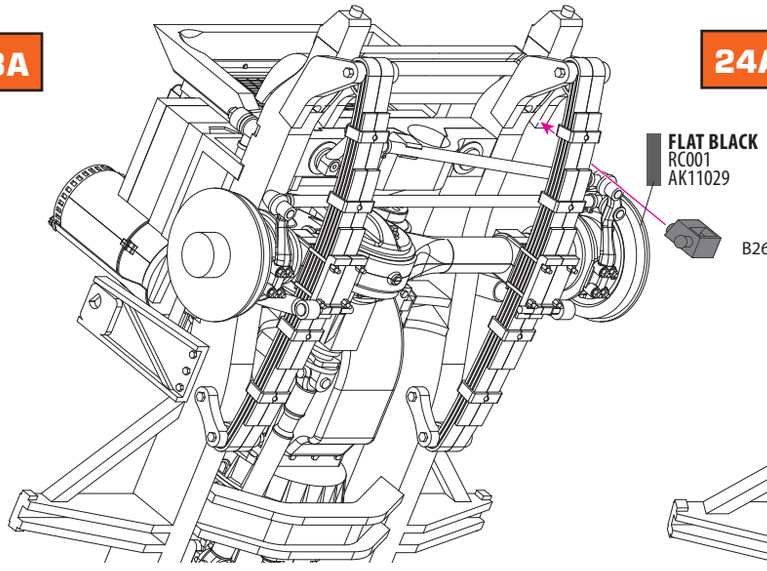


## 24A

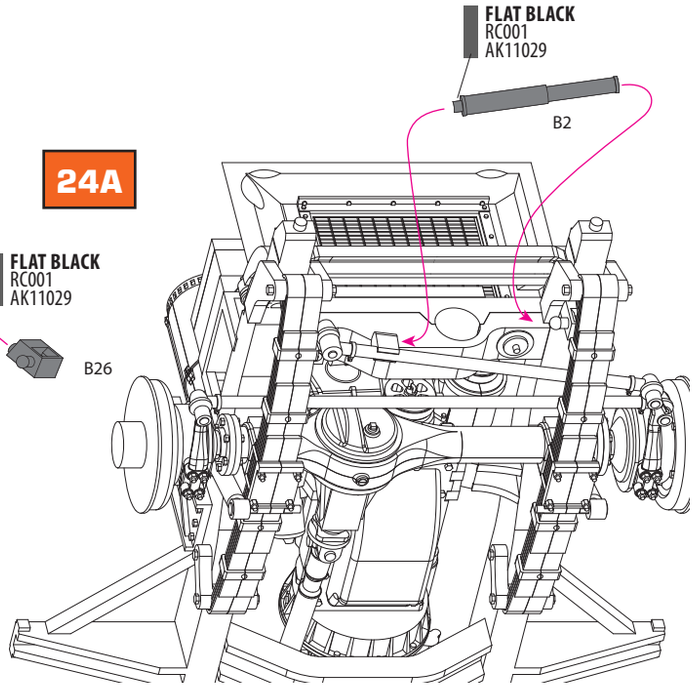

## 17B Left hand drive steering
*Op. volante al lado izquierdo*

B D F G

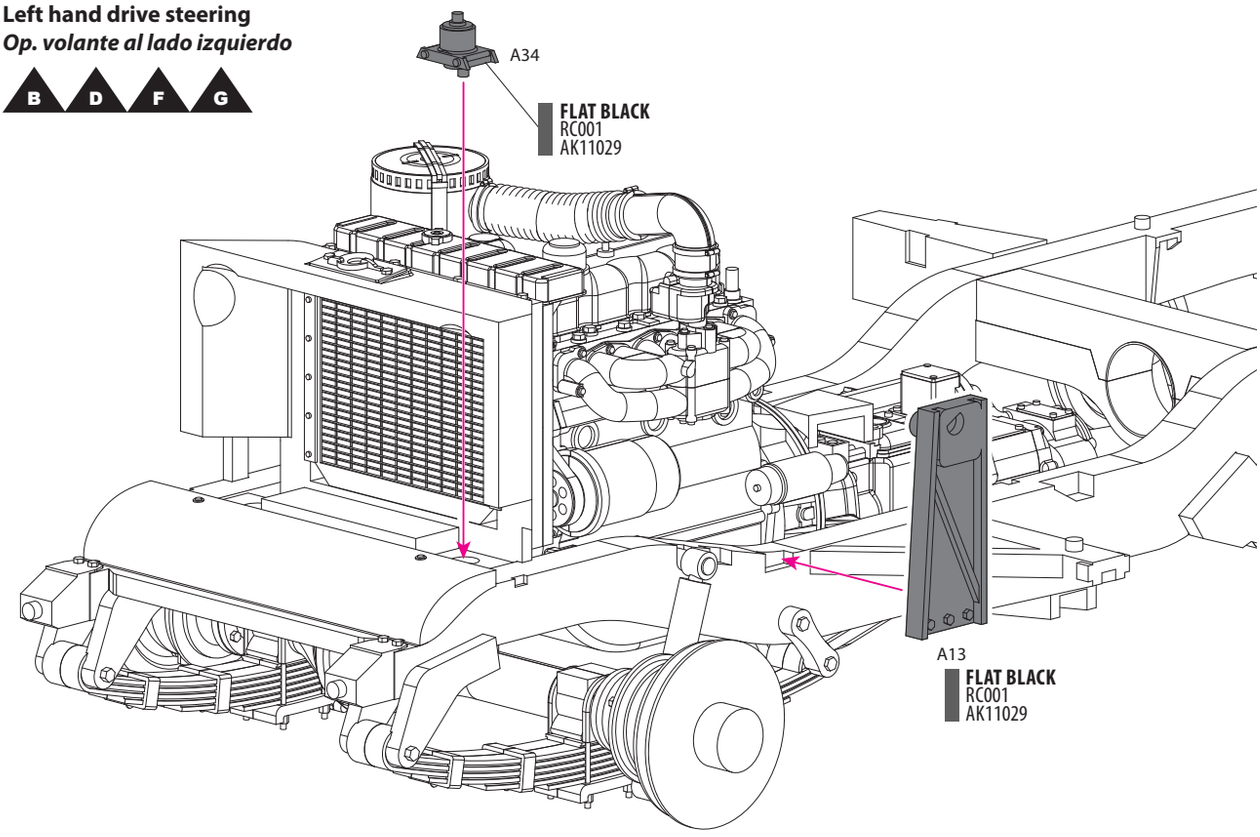


## 18B

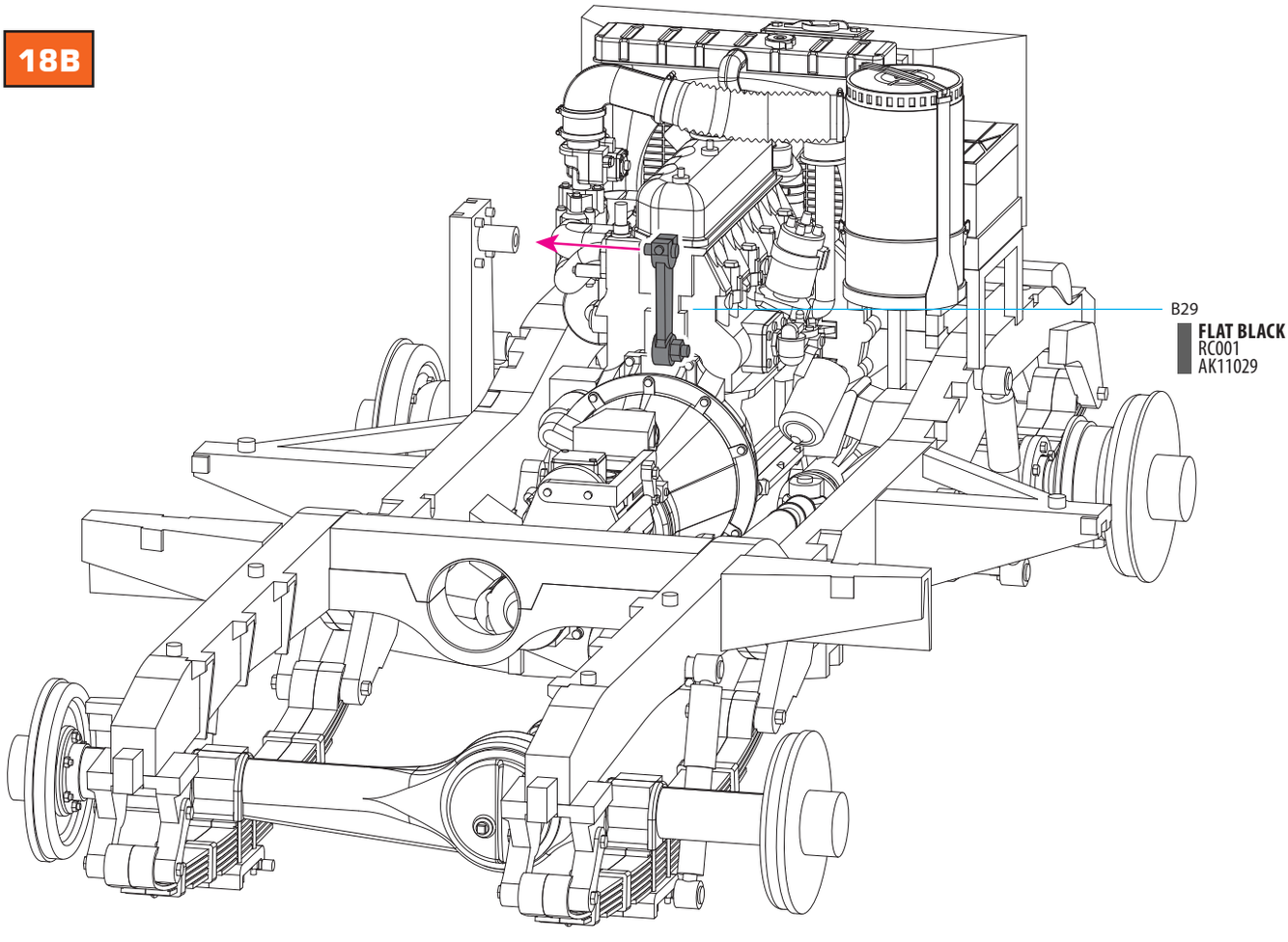

## 19B

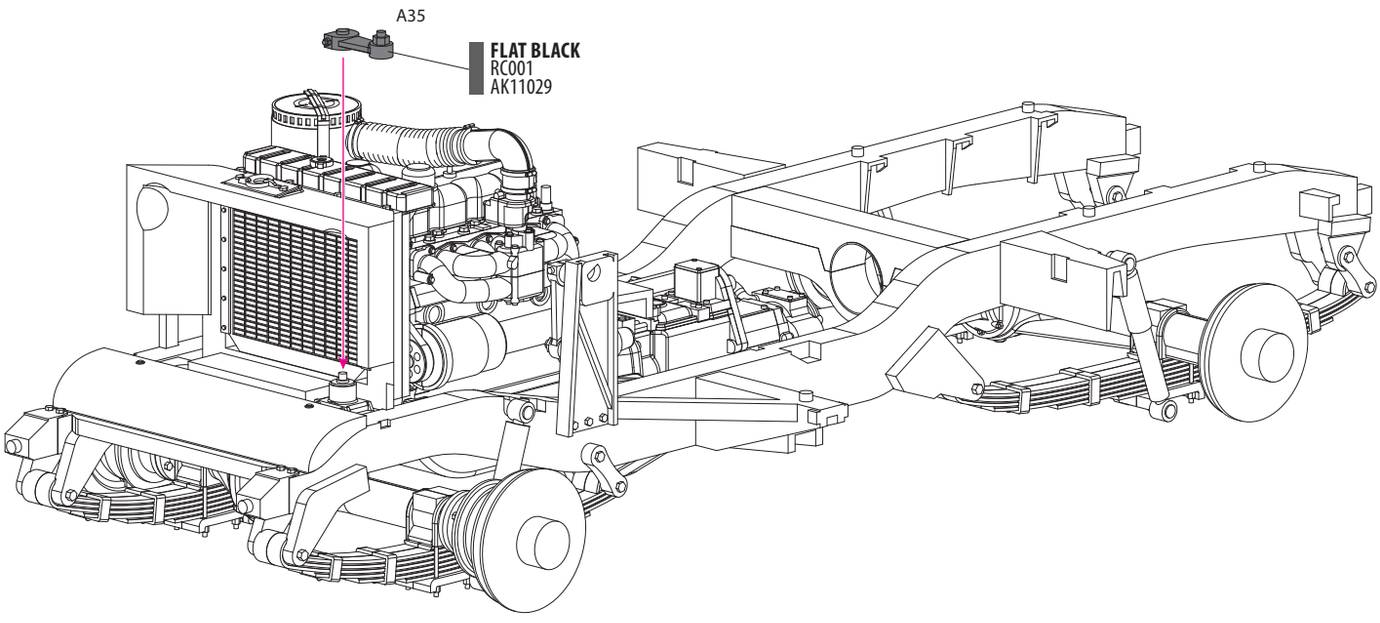


## 20B

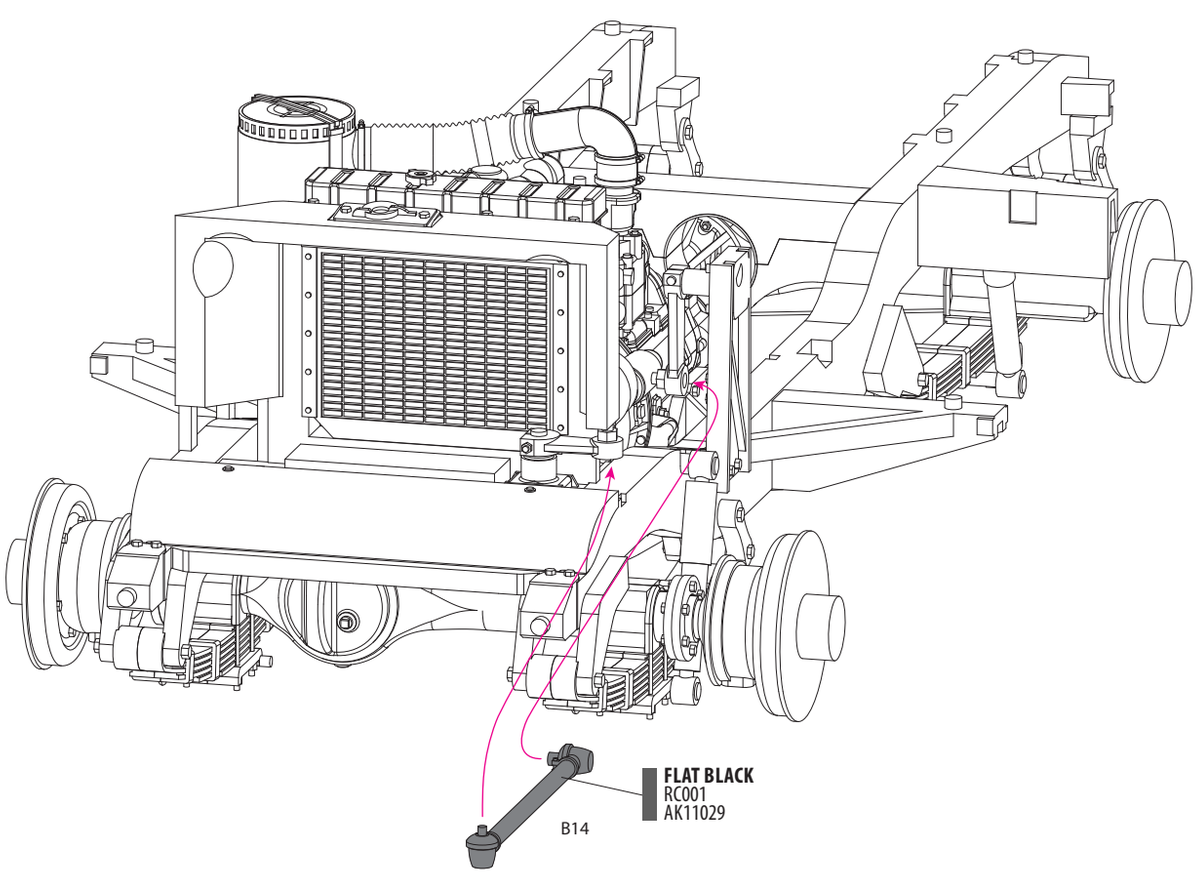

## 21B

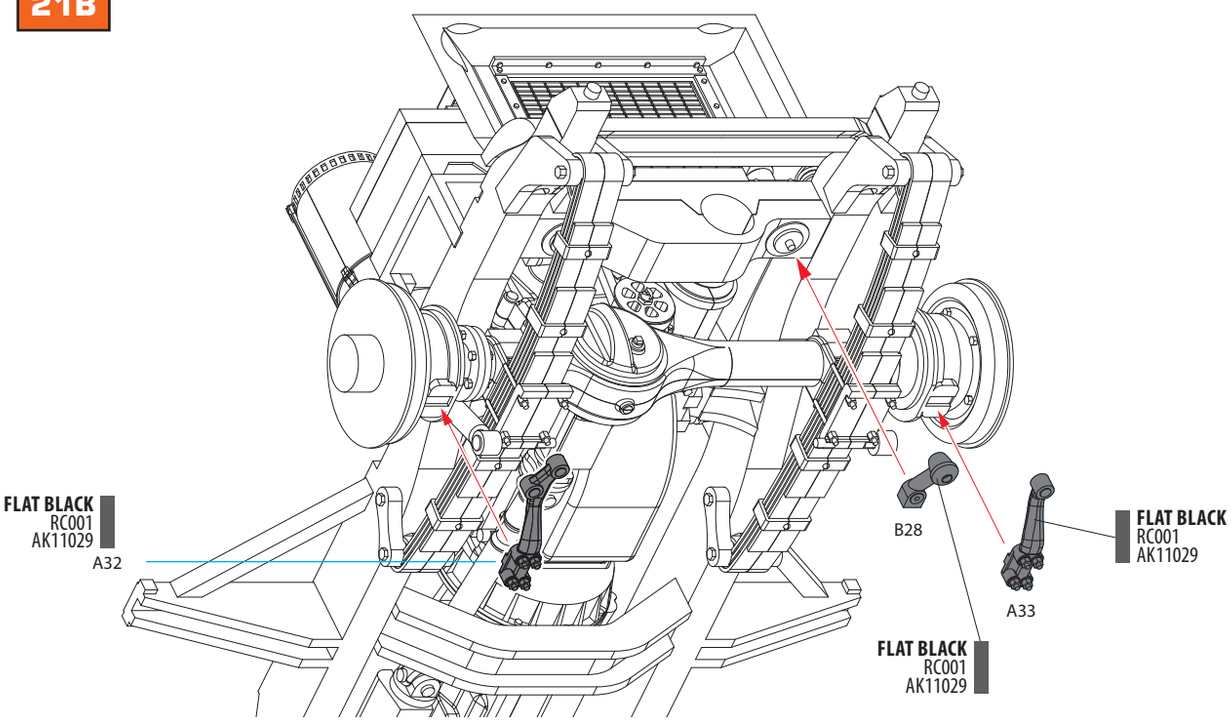


## 22B

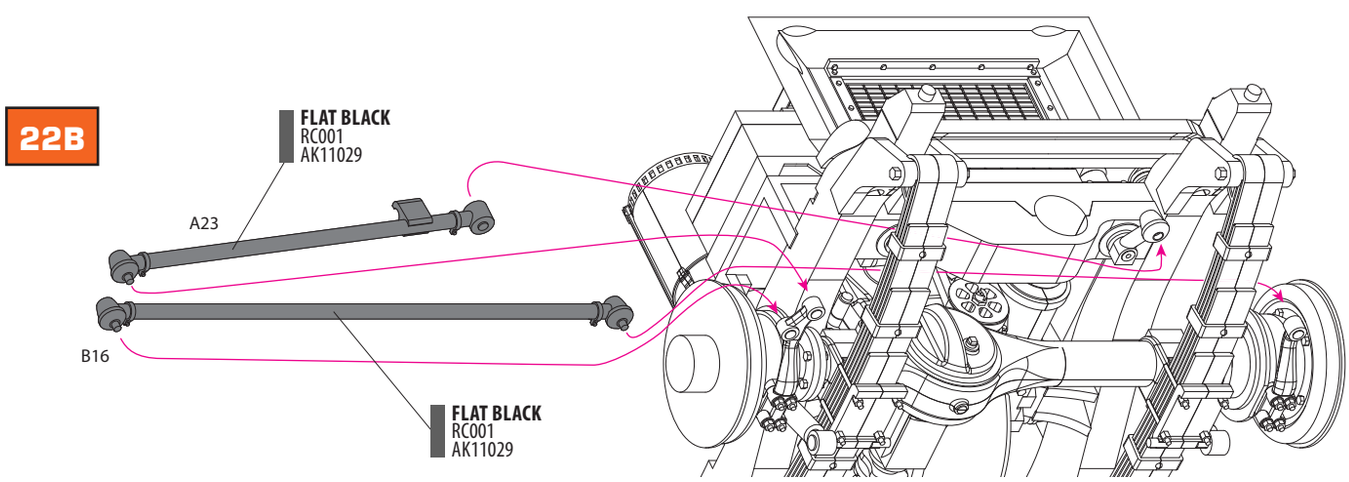


## 23B

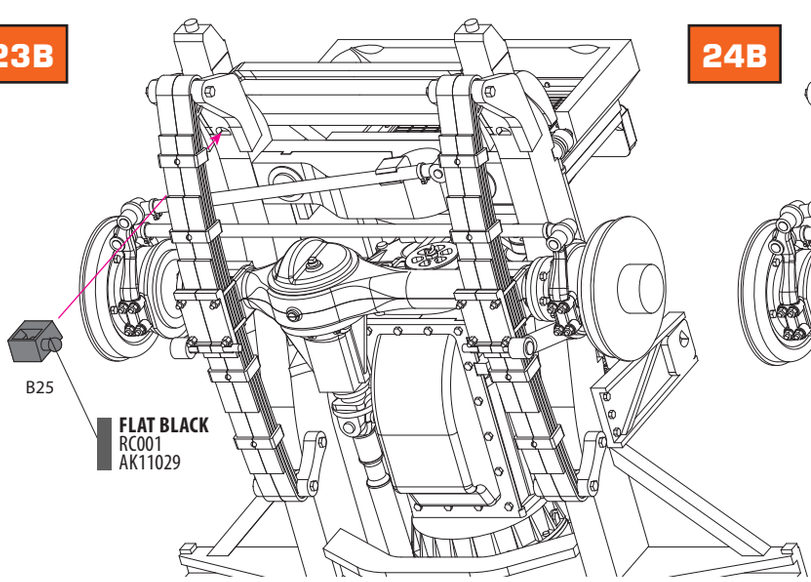


## 24B

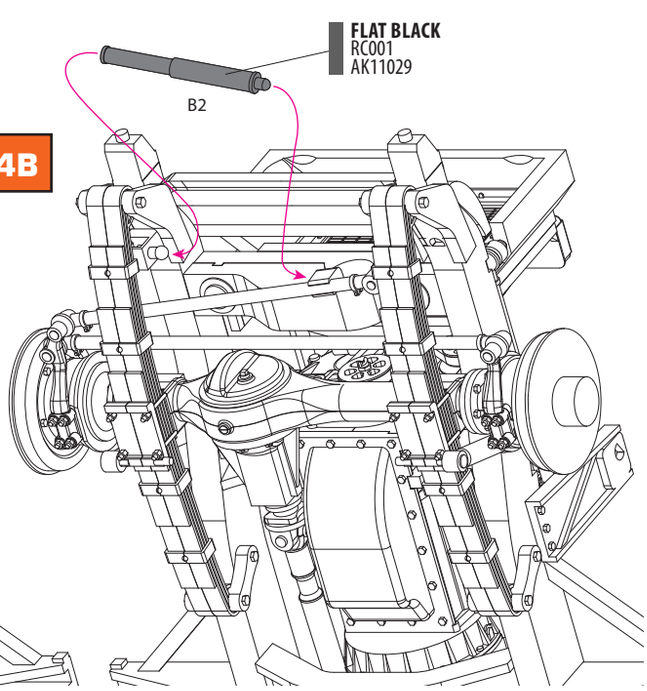

**25**

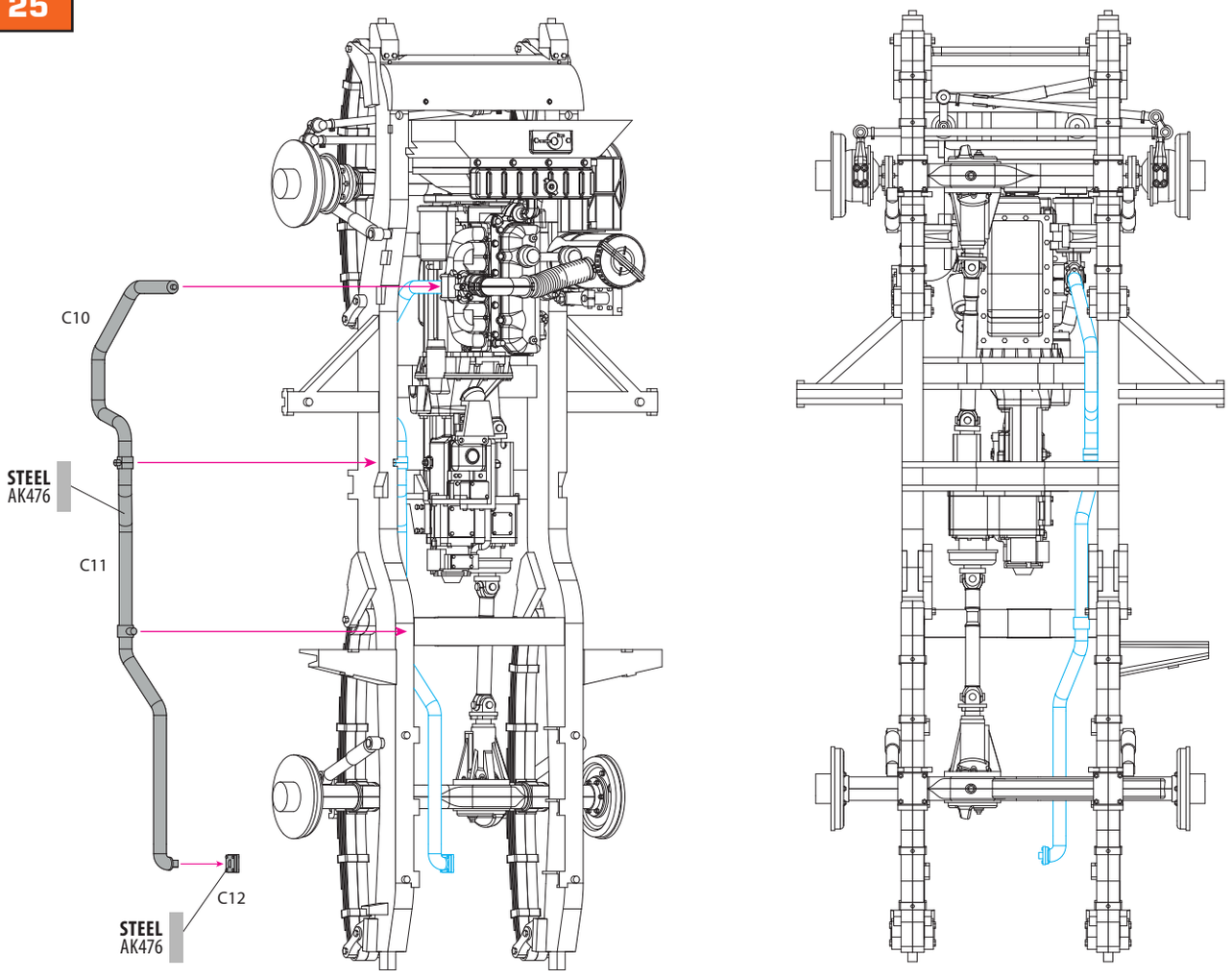


**26A** **Right hand drive exhaust pipe**
***Escape para la opción de volante al lado derecho***

A C E

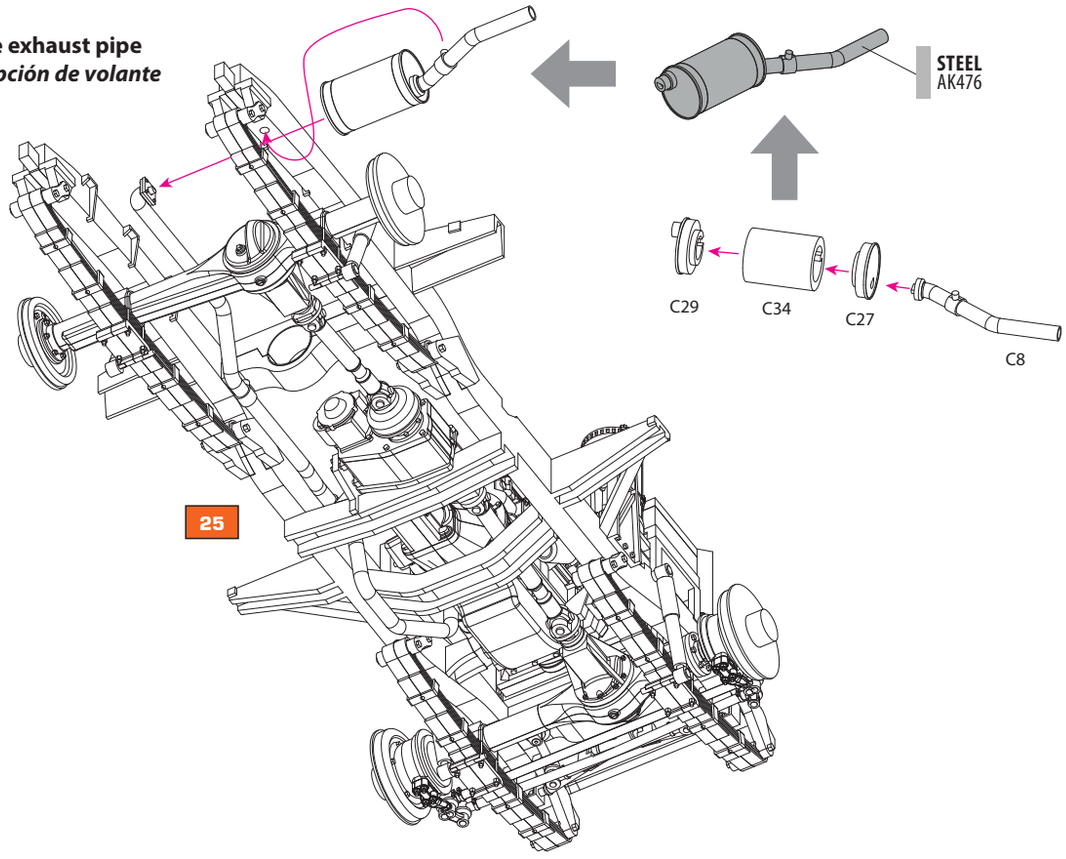

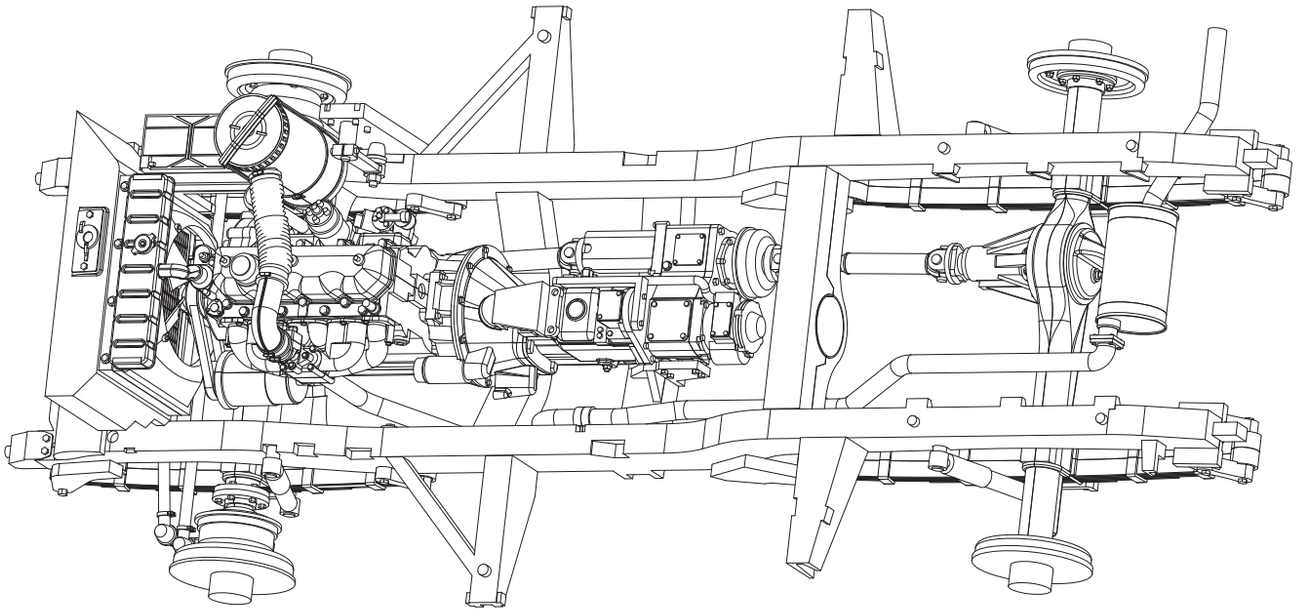

**26B** **Left hand drive exhaust pipe**
***Escape para la opción de volante al lado izquierdo*** B D F G

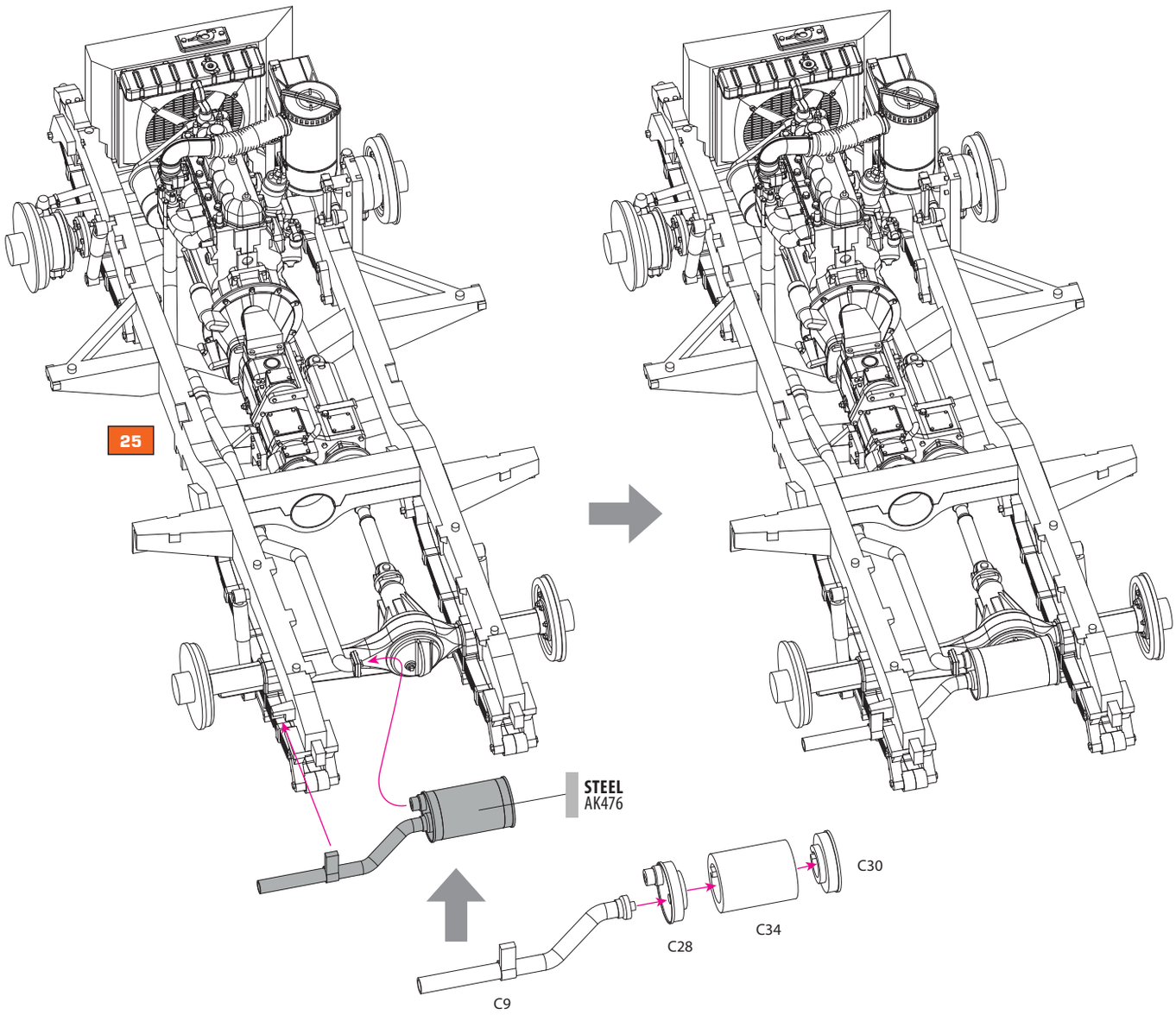

## 27

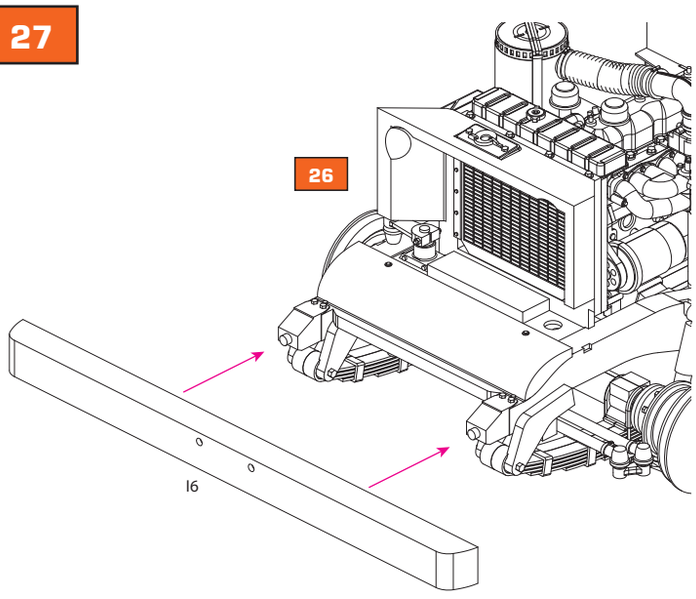
26
I6

## 28

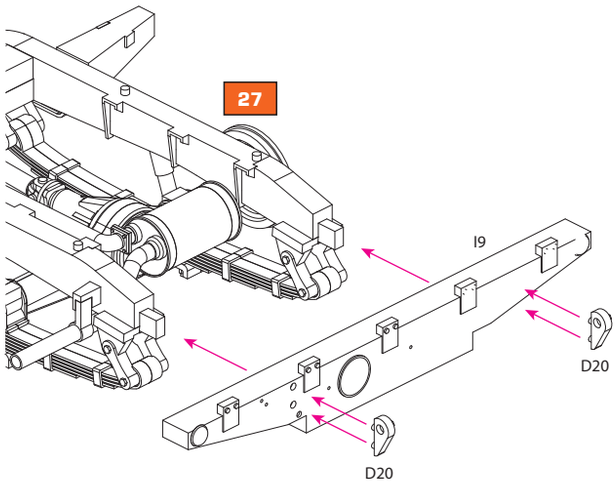
27
I9
D20
D20

## 29

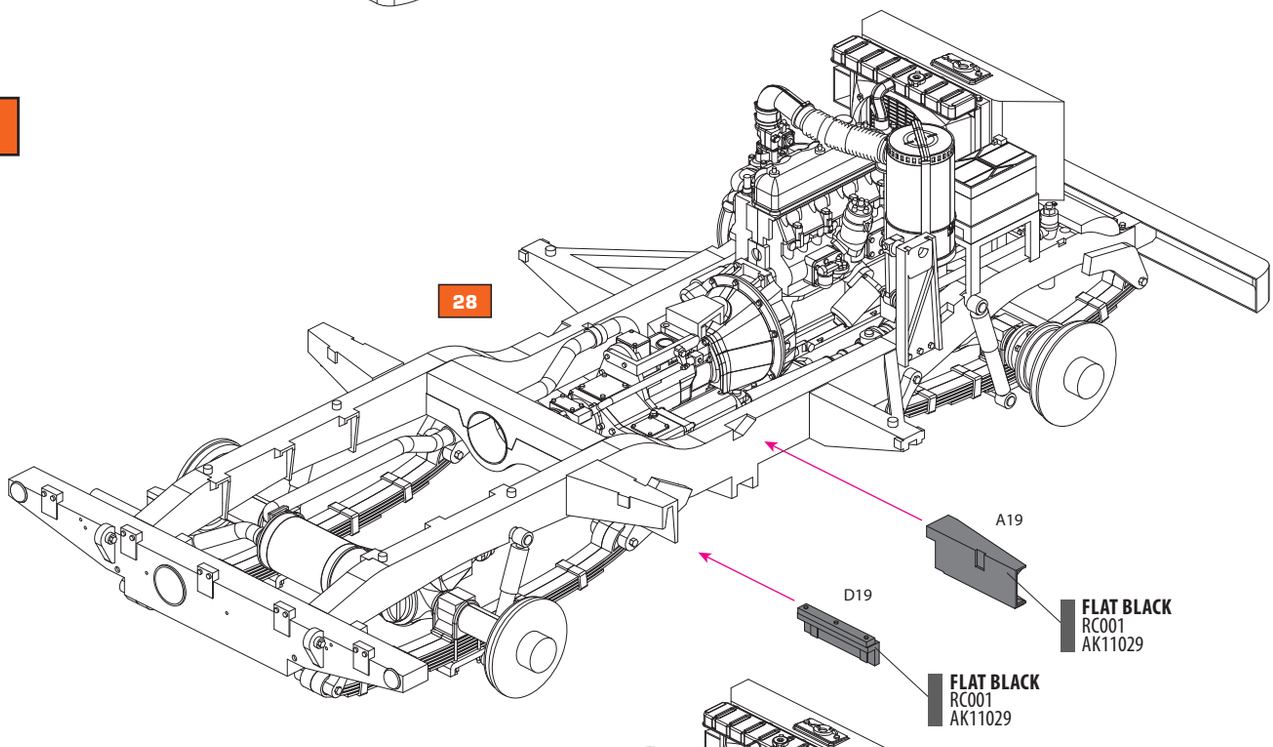
28
A19
FLAT BLACK
RC001
AK11029
D19
FLAT BLACK
RC001
AK11029

## 30

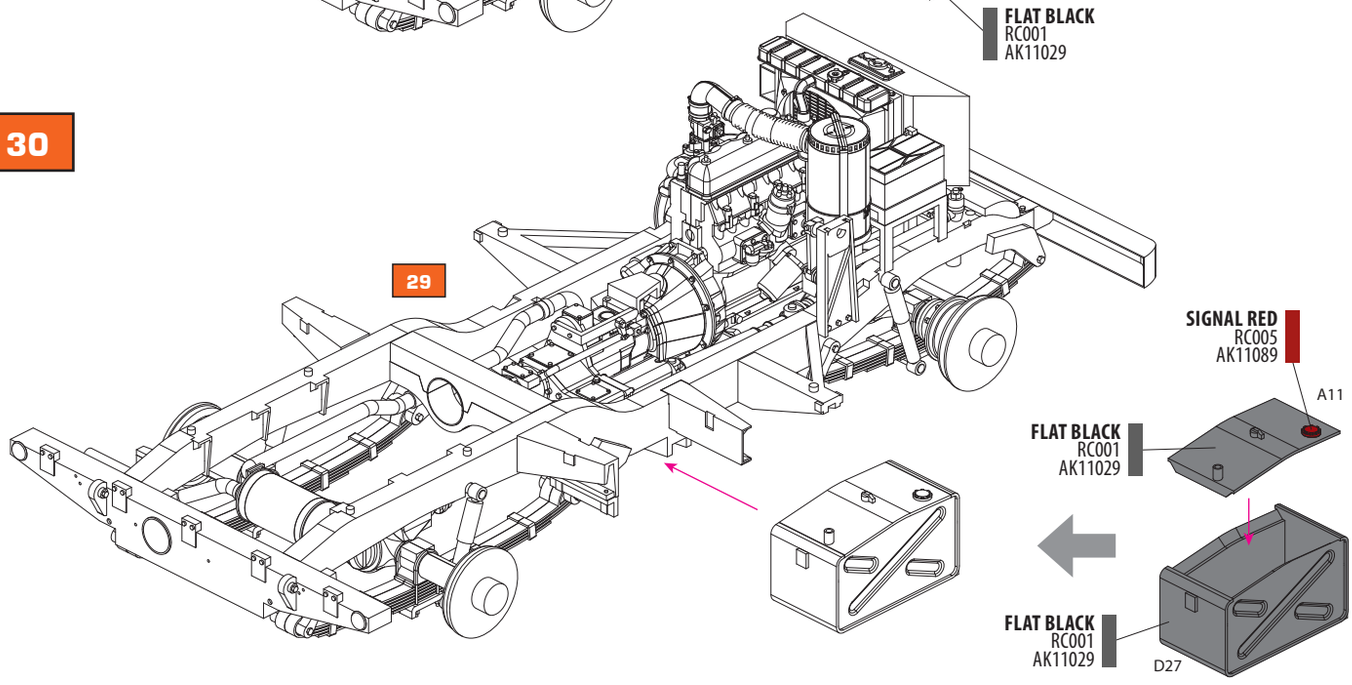
29
SIGNAL RED
RC005
AK11089
A11
FLAT BLACK
RC001
AK11029
FLAT BLACK
RC001
AK11029
D27

## 31

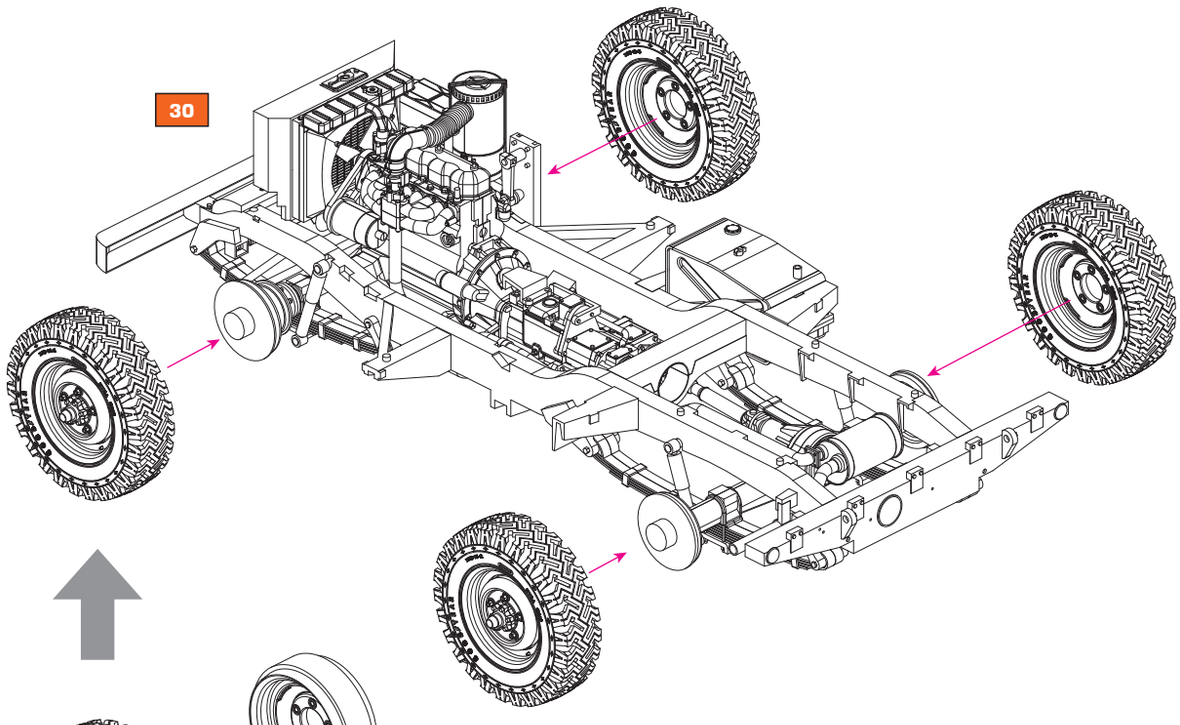


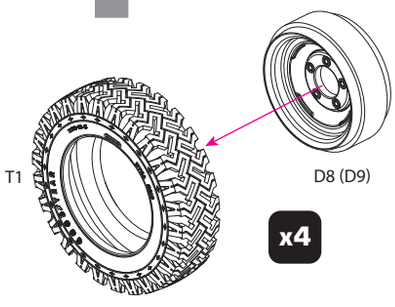


## 32

Unless indicated otherwise, inner surfaces and details should be painted in the original external base colour (see step 7).

*A menos que se indique lo contrario, las superficies internas y los detalles deben pintarse en el color base externo original.*

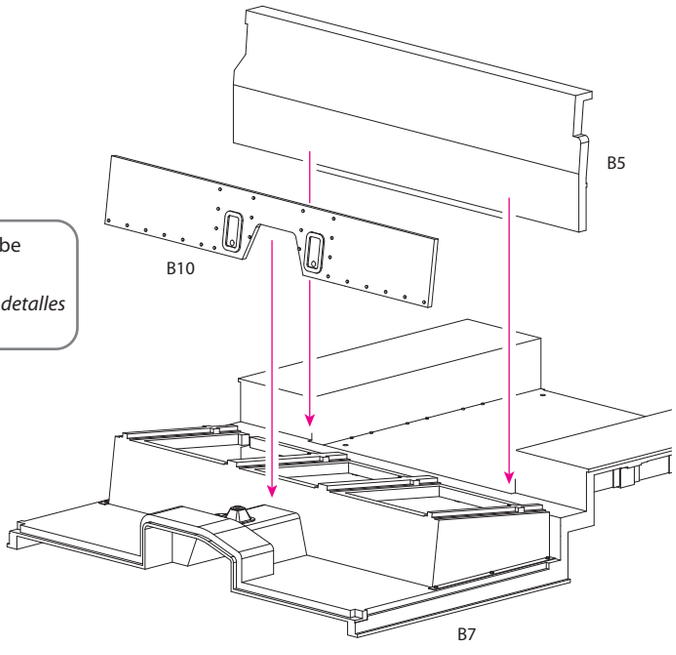


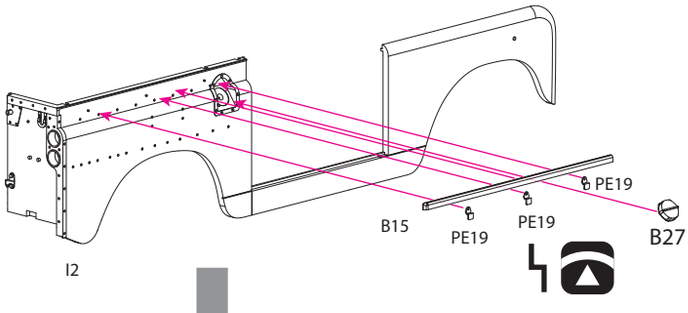


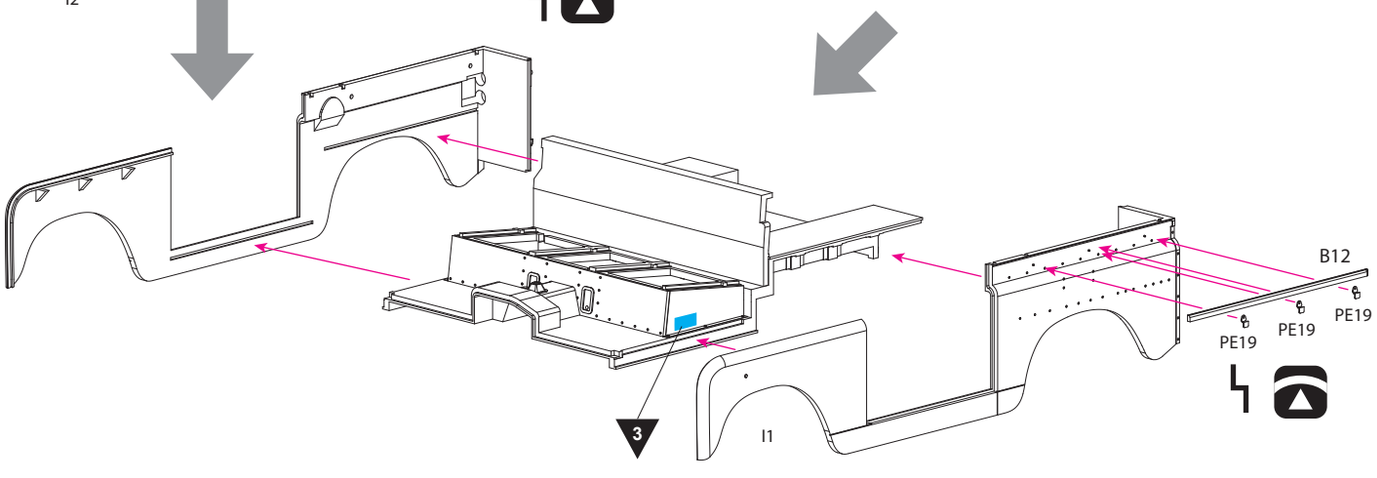

## 33

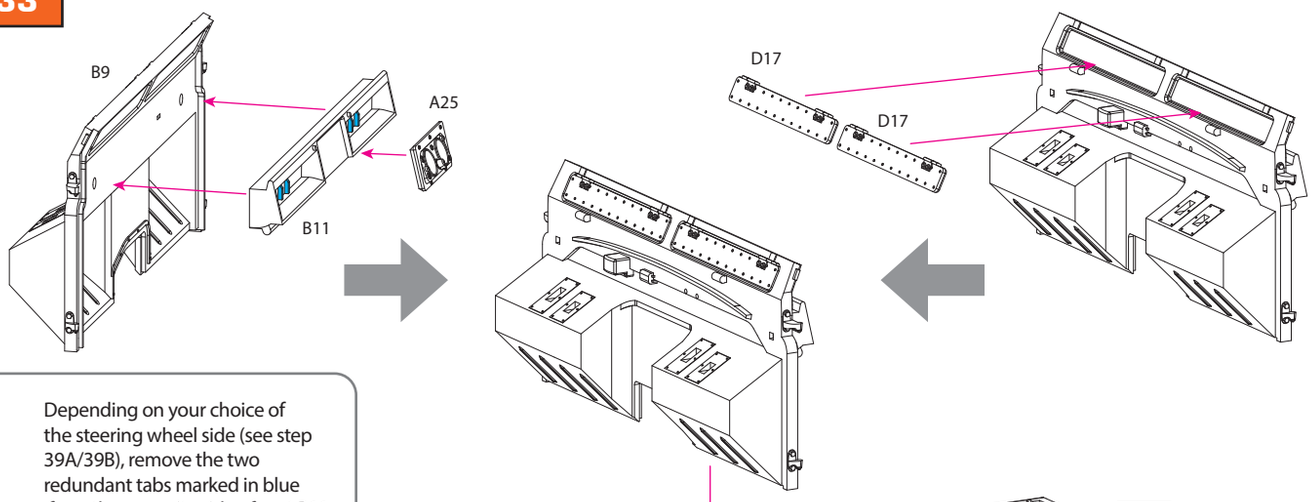


Depending on your choice of the steering wheel side (see step 39A/39B), remove the two redundant tabs marked in blue from the opposite side of part B11.

*Dependiendo de su elección de colocación del volante al lado derecho o izquierdo (consulte los pasos 39A/39B), elimine las dos pestañas redundantes marcadas en azul del lado opuesto de la pieza B11.*

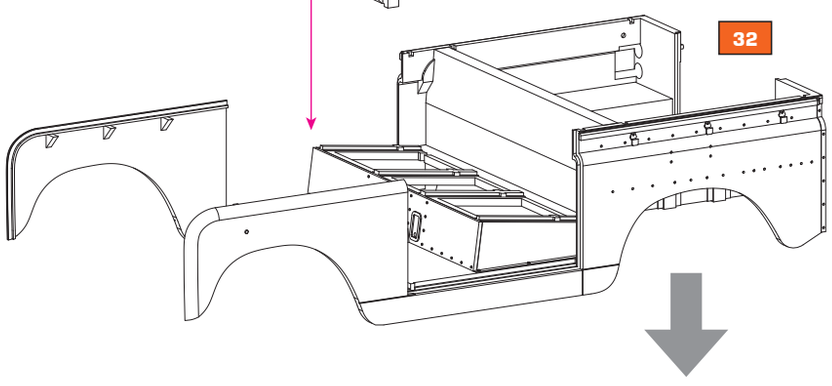


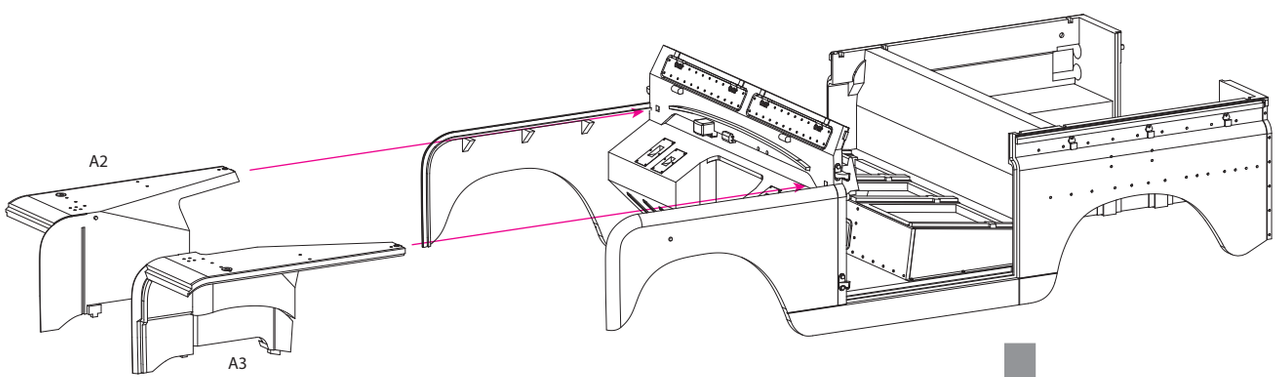


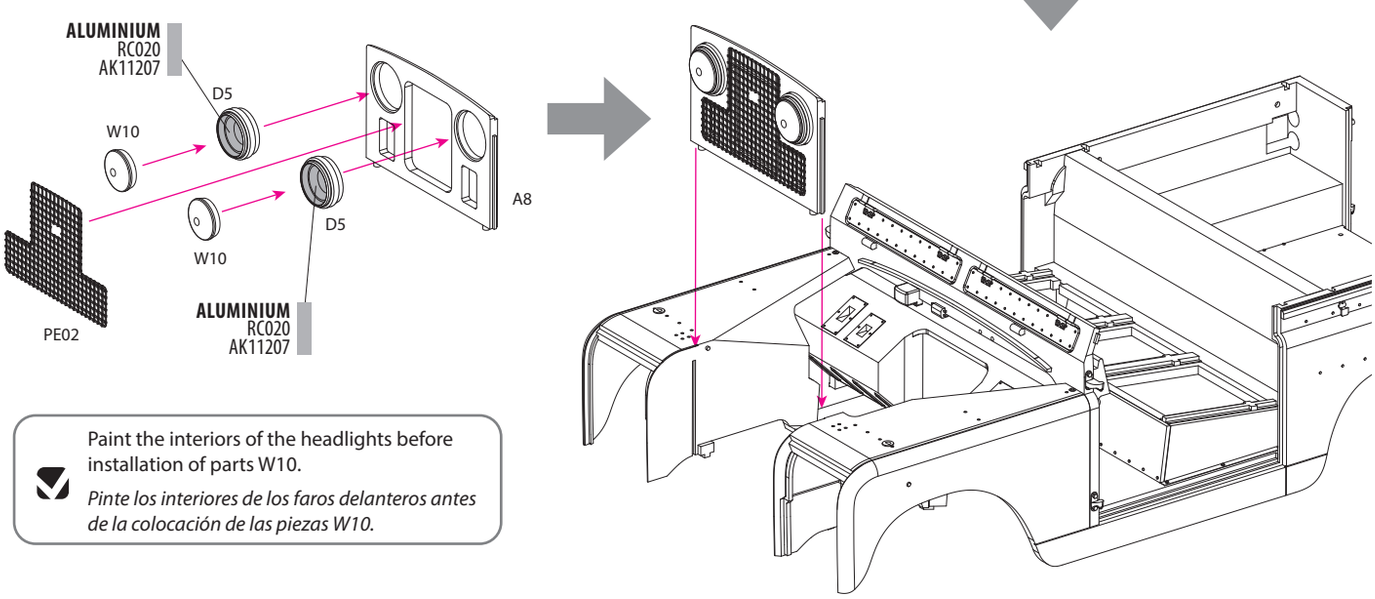


Paint the interiors of the headlights before installation of parts W10.

*Pinte los interiores de los faros delanteros antes de la colocación de las piezas W10.*

## 34

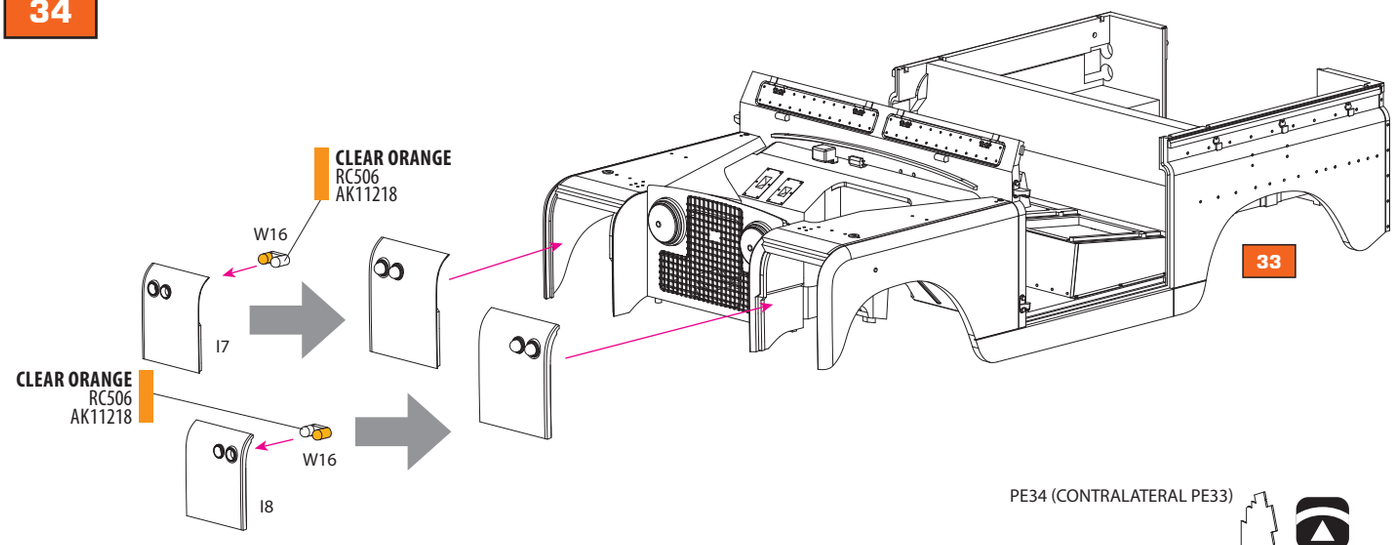
CLEAR ORANGE
RC506
AK11218
W16
I7
CLEAR ORANGE
RC506
AK11218
W16
I8
33

## 35

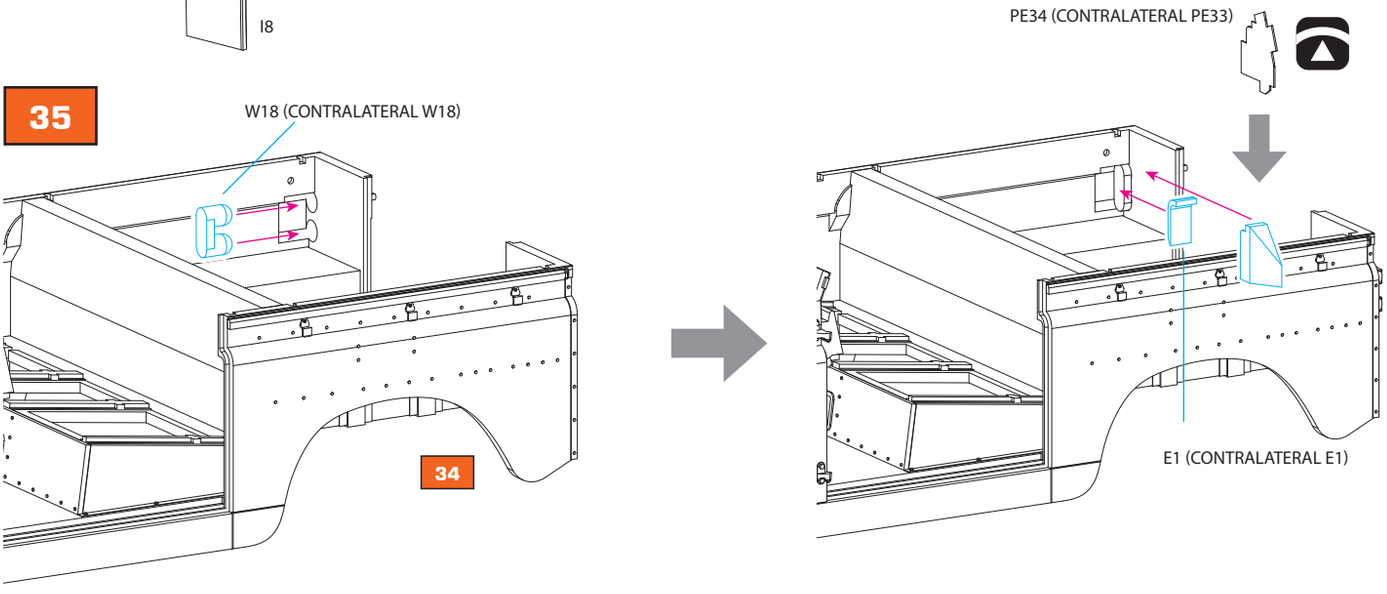
W18 (CONTRALATERAL W18)
34
PE34 (CONTRALATERAL PE33)
E1 (CONTRALATERAL E1)

## 36

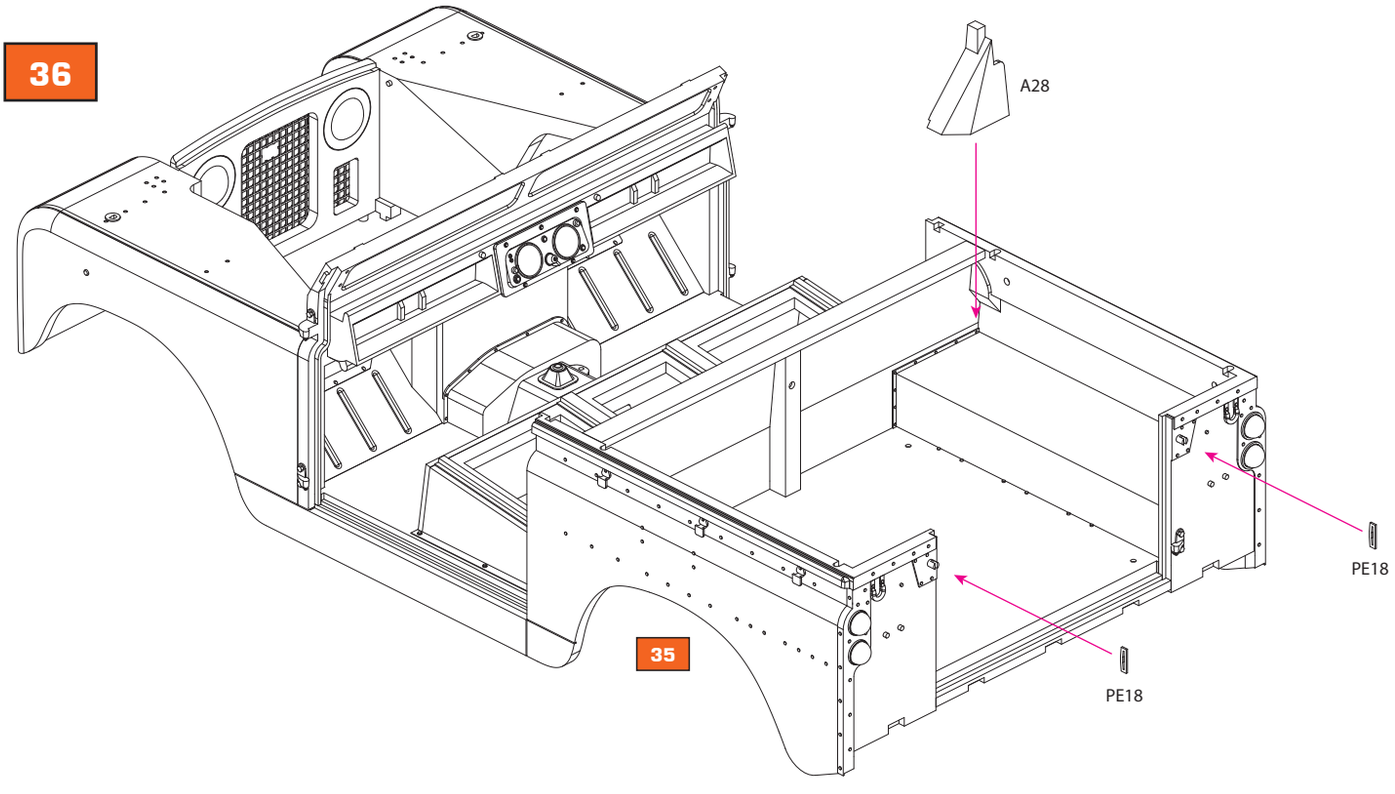
A28
PE18
PE18
35

## 37

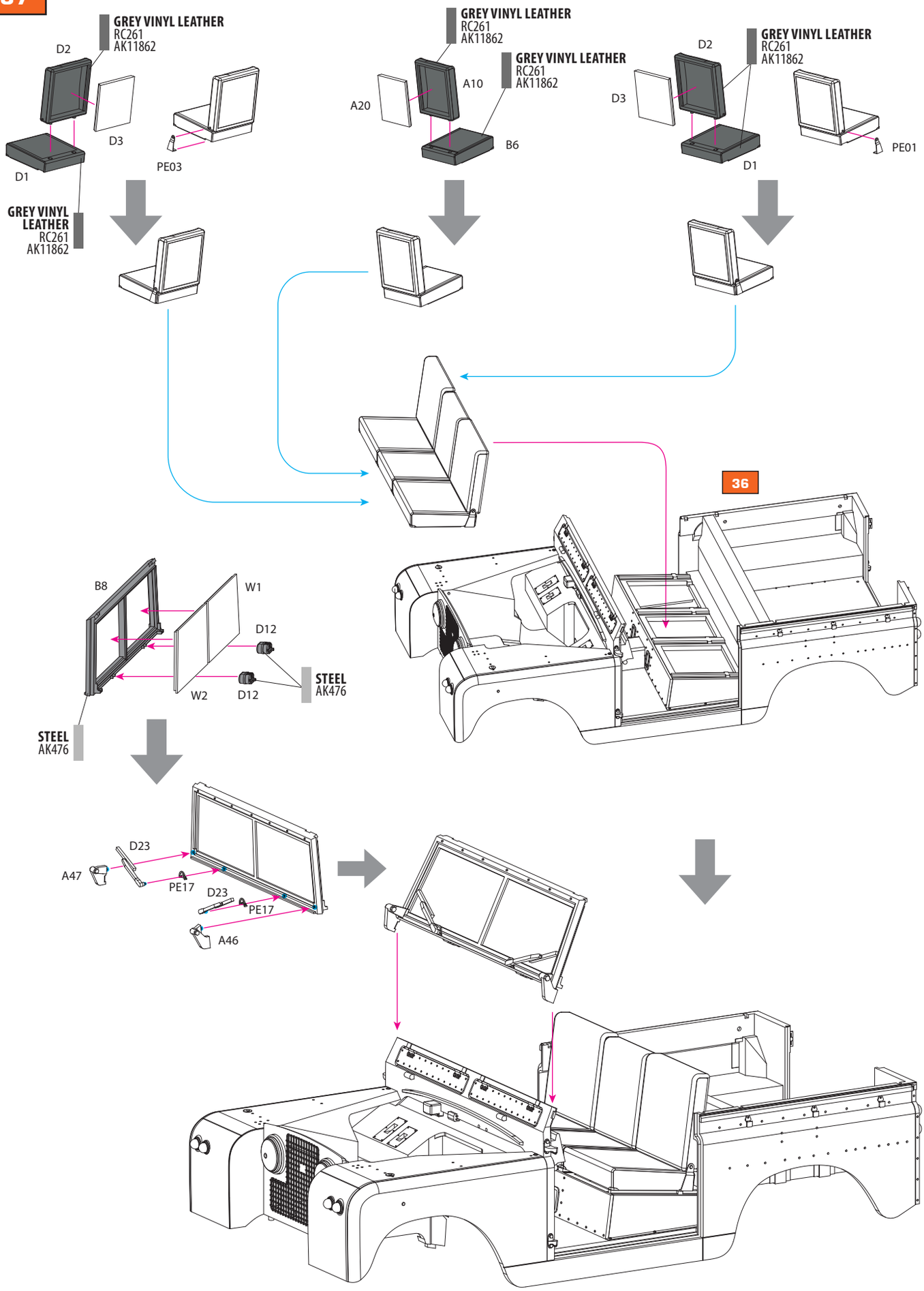
GREY VINYL LEATHER
RC261
AK11862
D2
D3
D1
PE03
GREY VINYL LEATHER
RC261
AK11862
A20
A10
B6
GREY VINYL LEATHER
RC261
AK11862
D2
D3
D1
PE01
GREY VINYL LEATHER
RC261
AK11862
36
B8
W1
D12
W2
D12
STEEL
AK476
STEEL
AK476
D23
A47
PE17
D23
PE17
A46

## 38

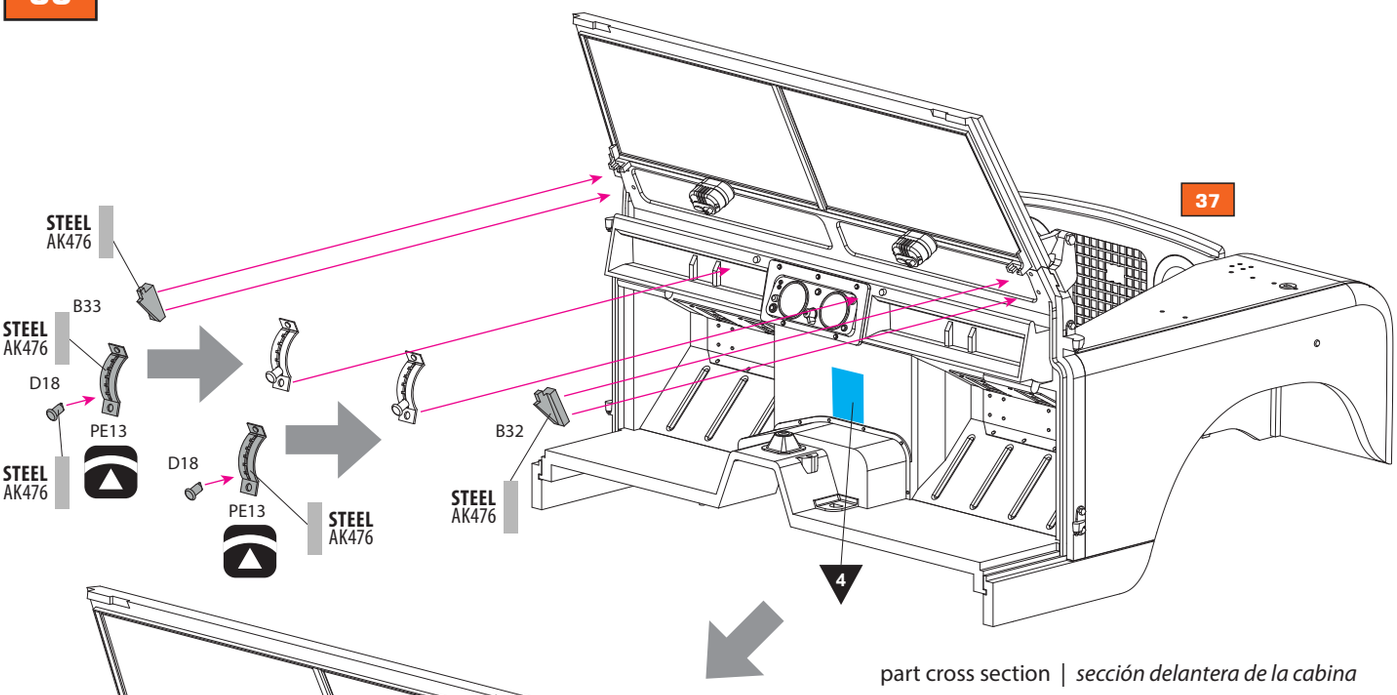


part cross section | *sección delantera de la cabina*

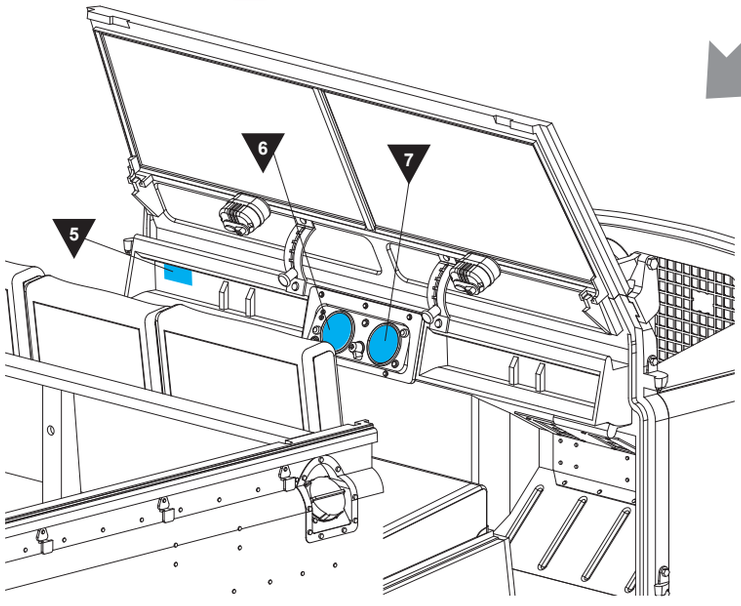


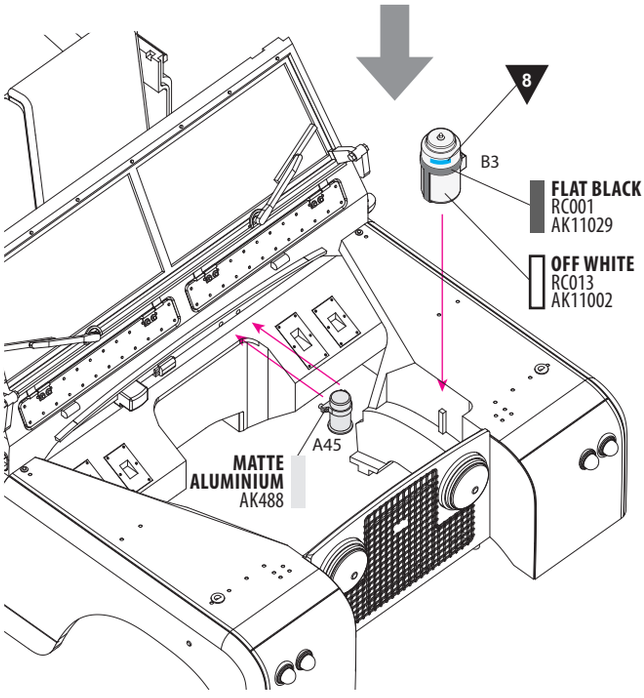


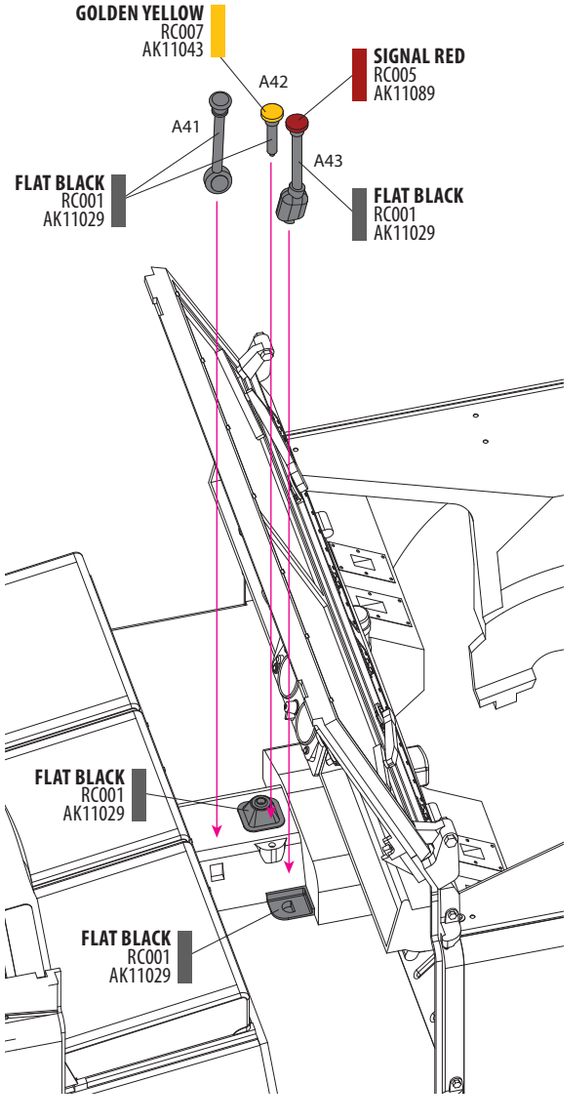

## 39A Right hand drive steering
*Op. volante al lado derecho*

A C E

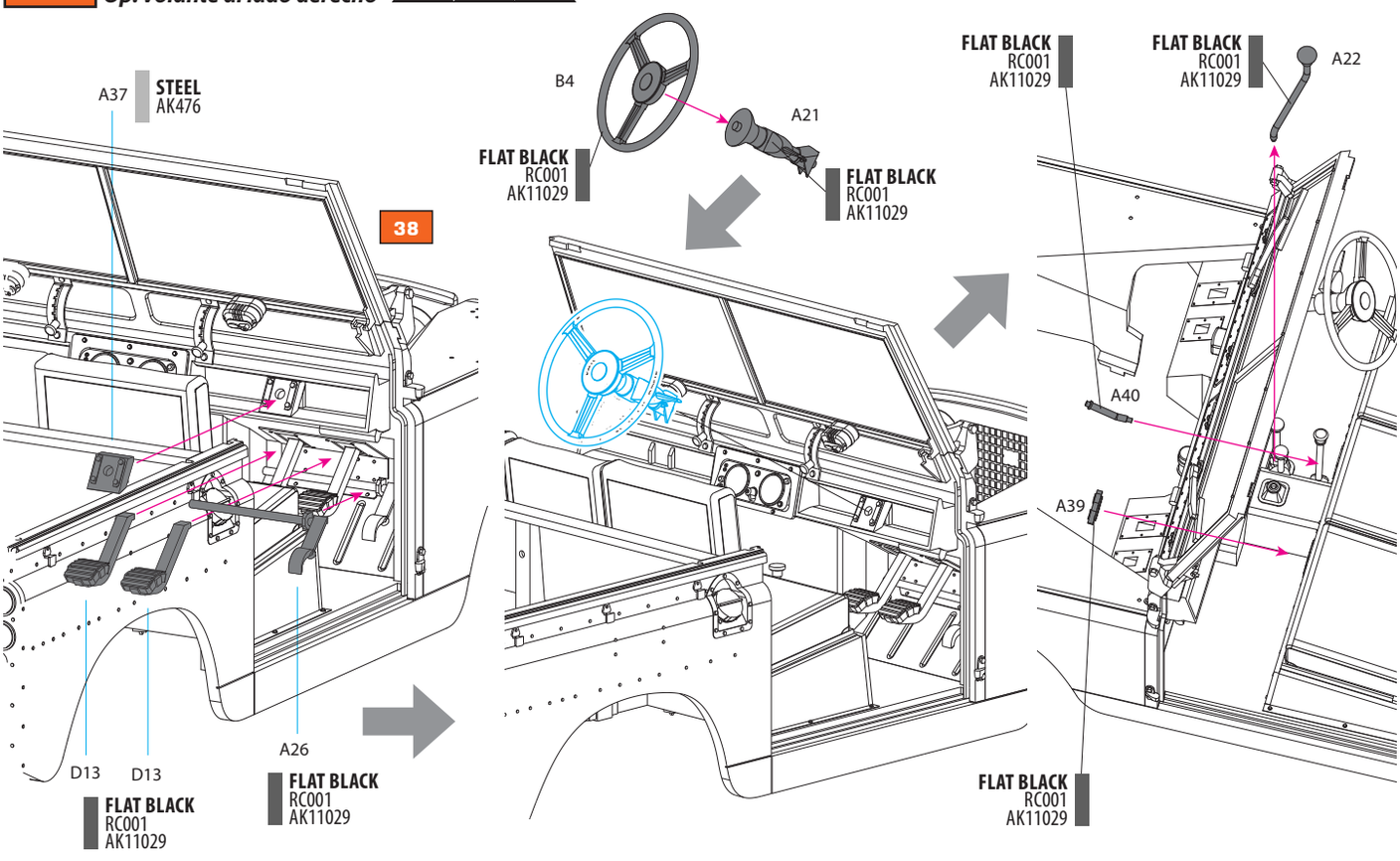


## 39B Left hand drive steering
*Op. volante al lado izquierdo*

B D F G

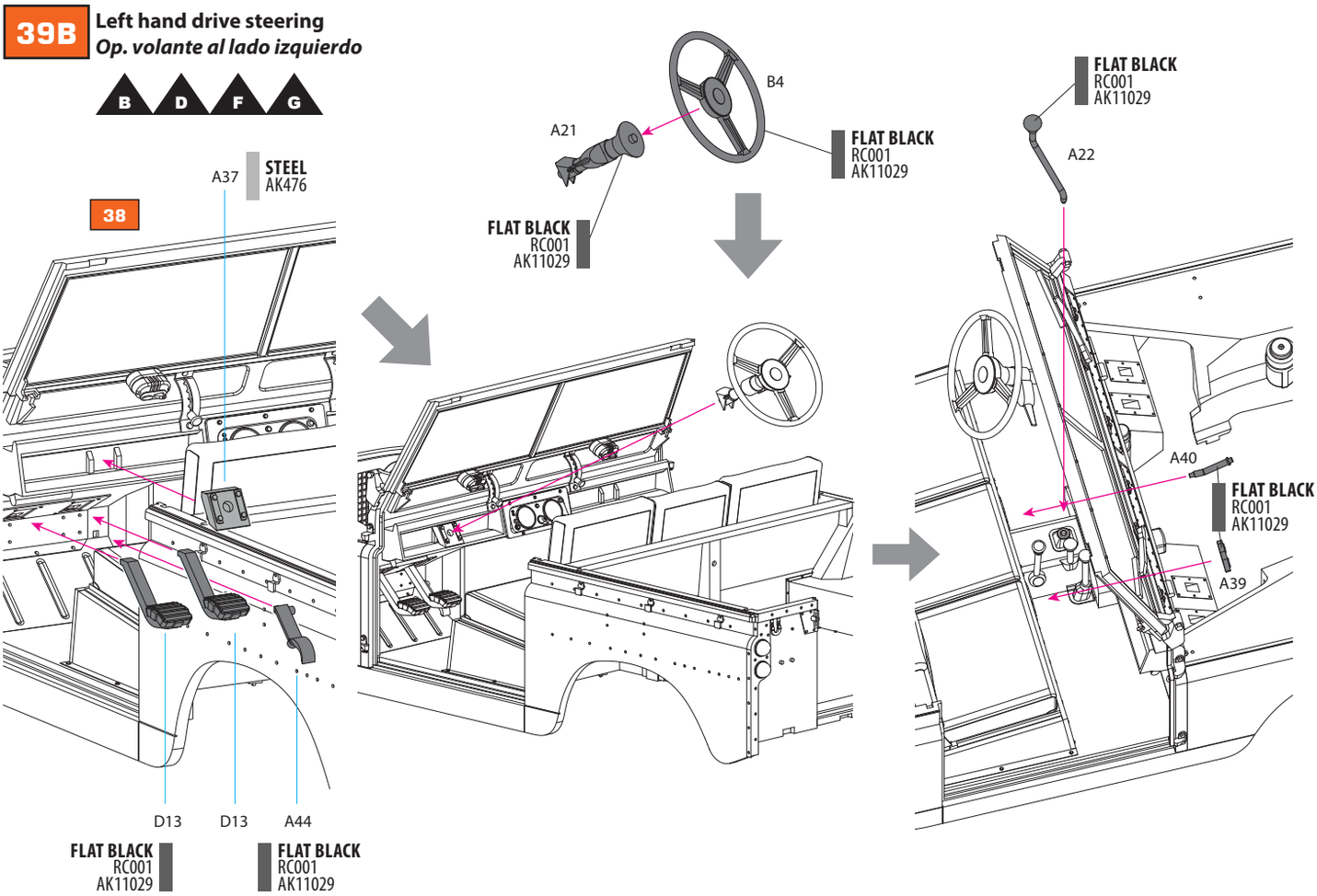

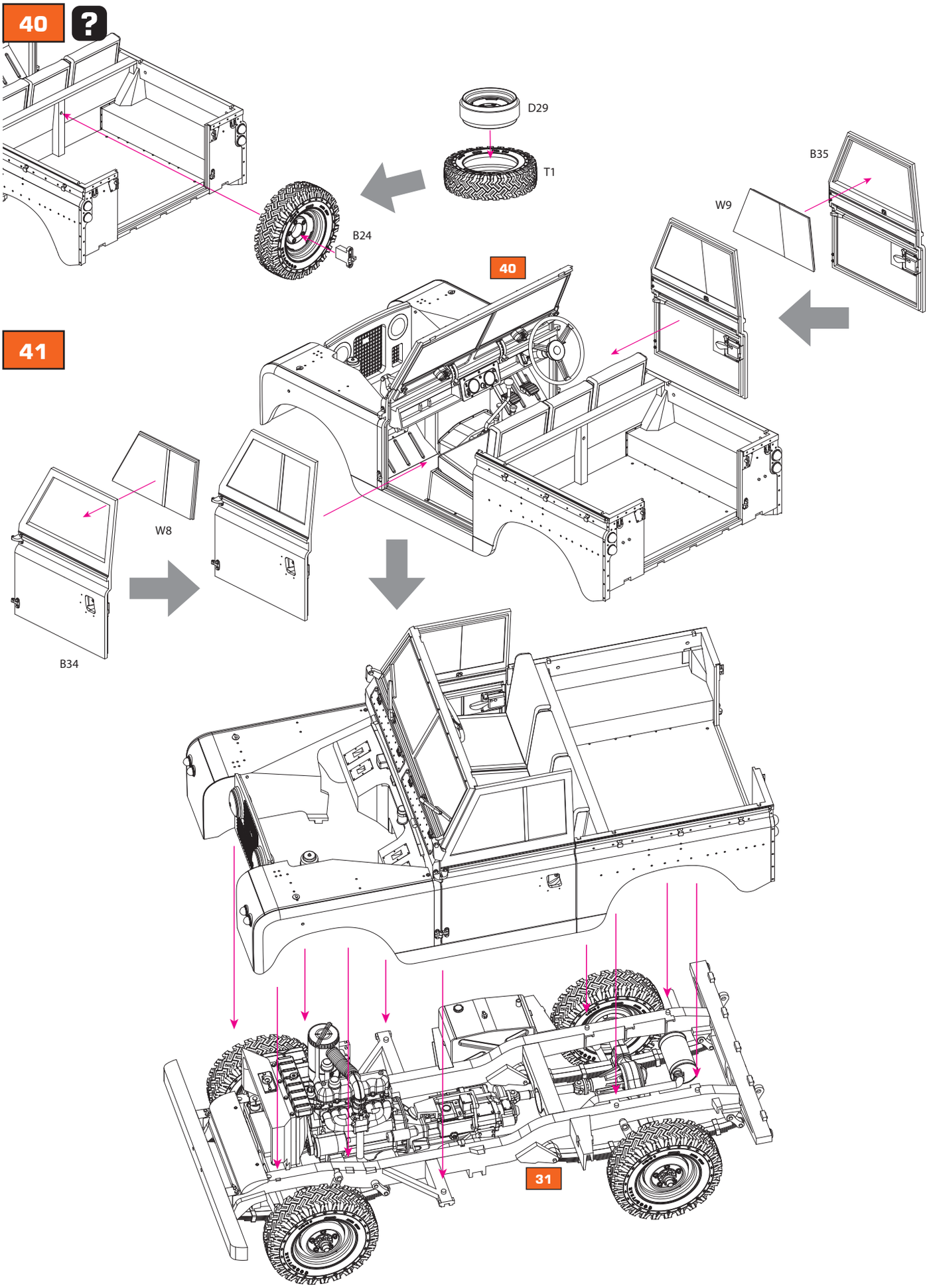
40
?
D29
T1
B24
B35
W9
40
41
W8
B34
31

## 42A Right hand drive steering
*Op. volante al lado derecho*

A C E

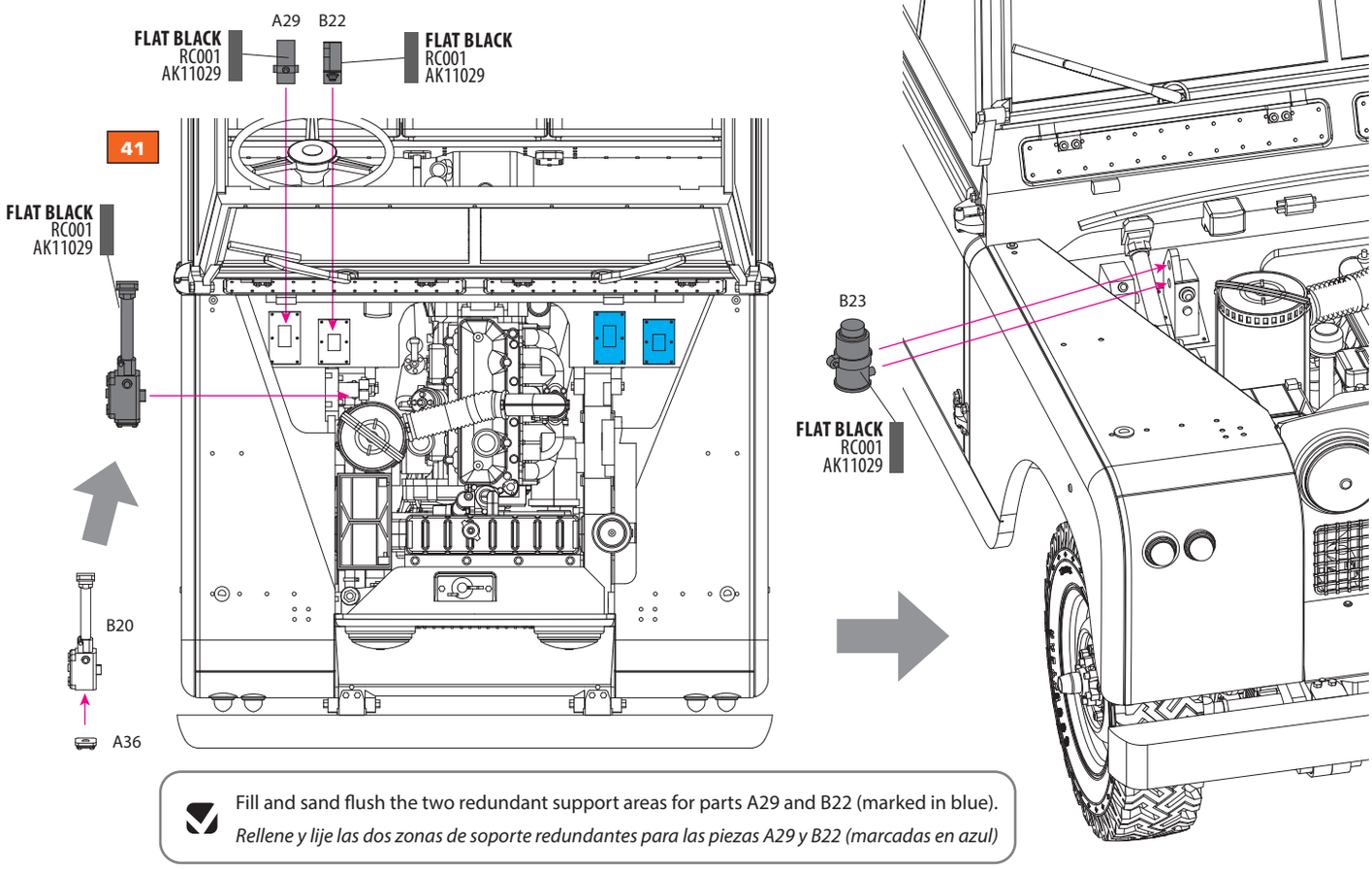


Fill and sand flush the two redundant support areas for parts A29 and B22 (marked in blue).
*Rellene y lije las dos zonas de soporte redundantes para las piezas A29 y B22 (marcadas en azul)*

## 42B Left hand drive steering
*Op. volante al lado izquierdo*

B D F G

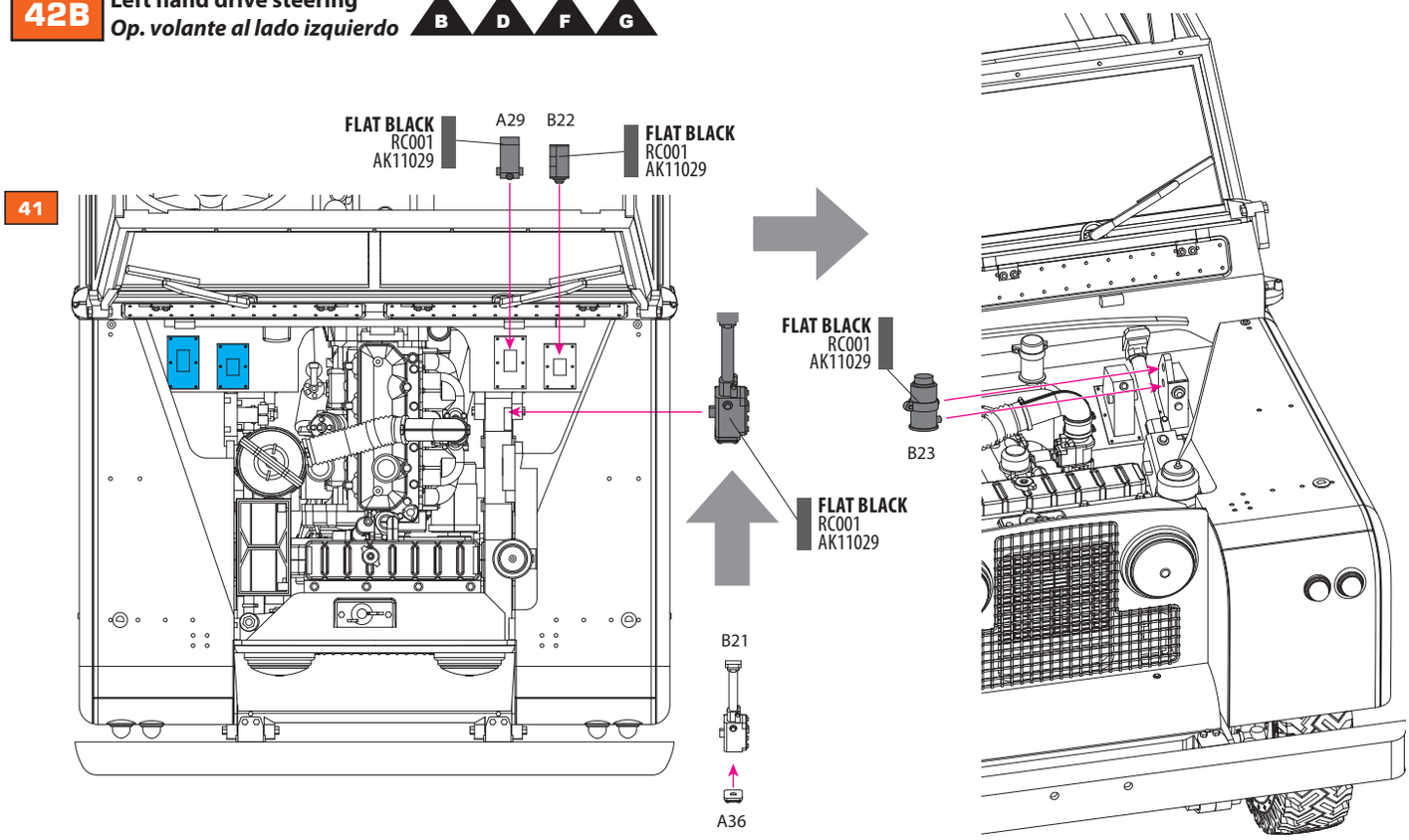

## 43

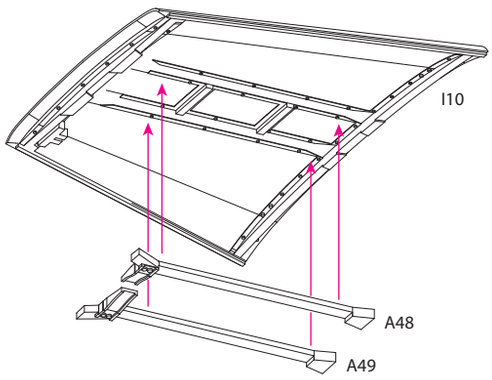


## 44A ?

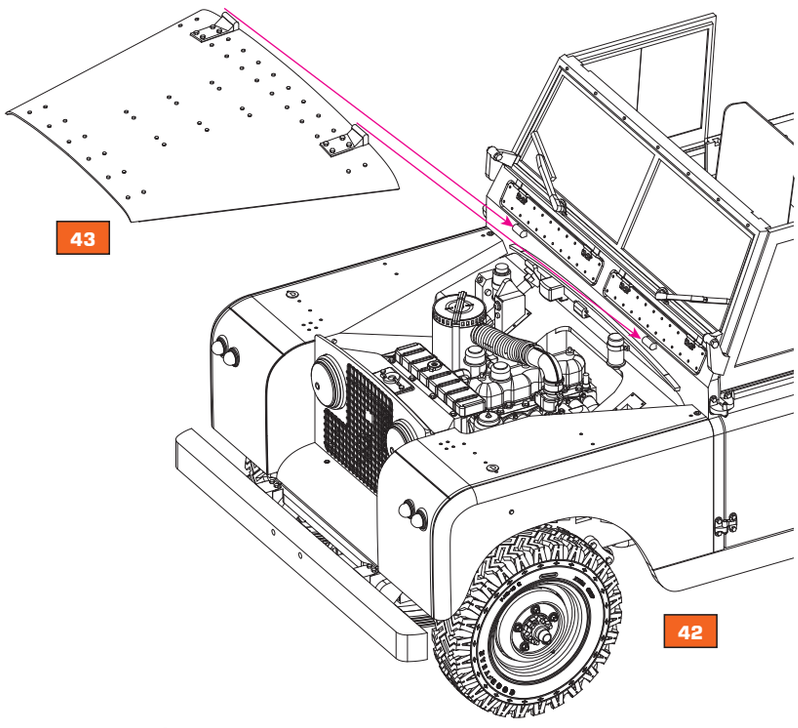


## 44B ?

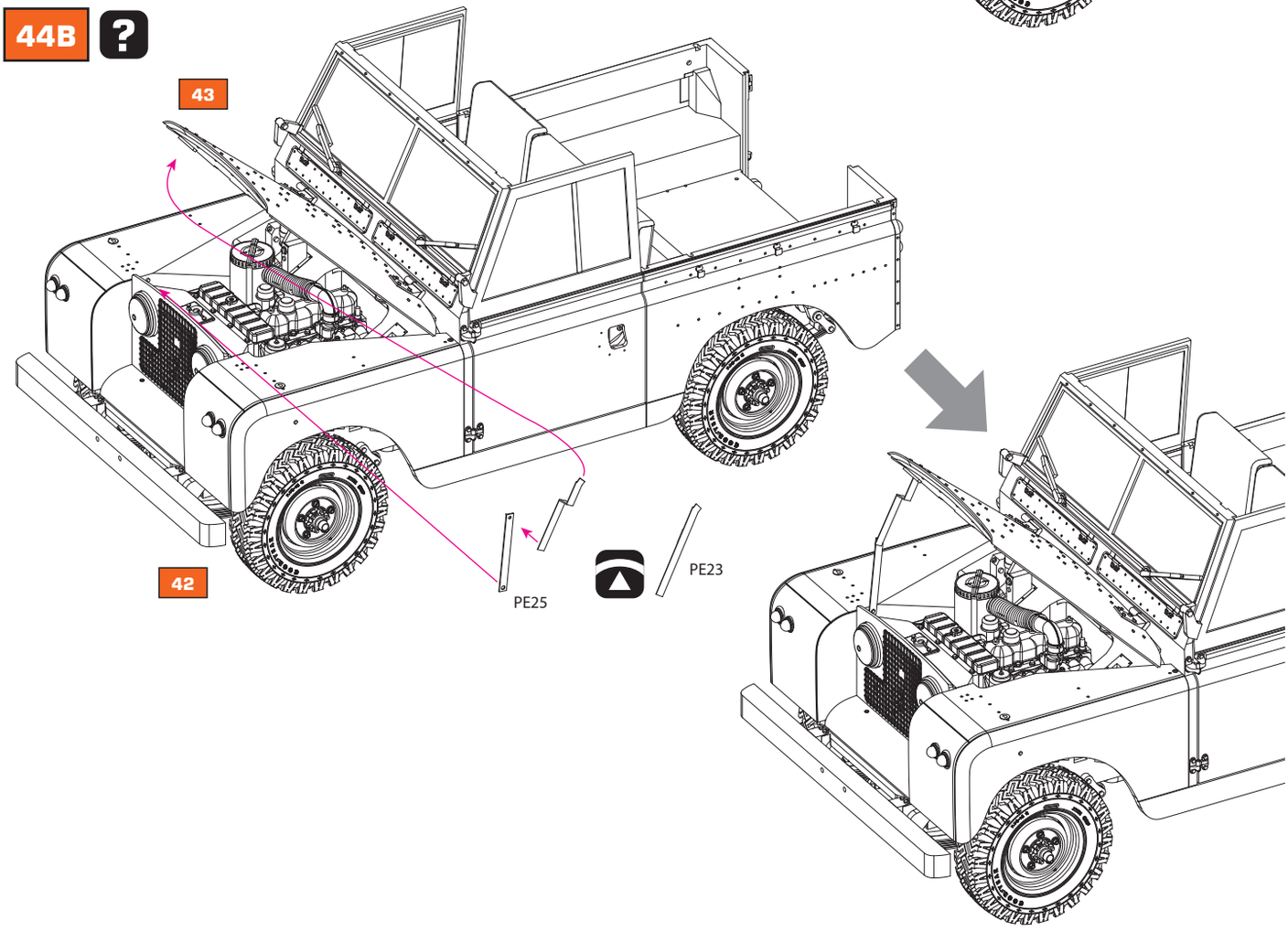

45 ?

x2 folded down position | *posición bajada*

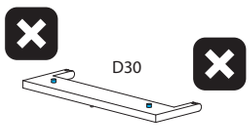


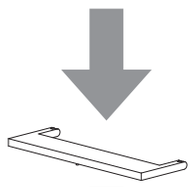

x2 folded down position | *posición bajada*

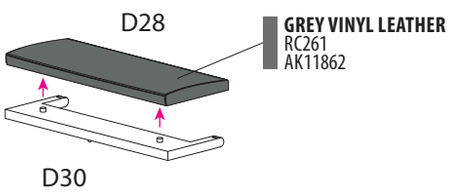


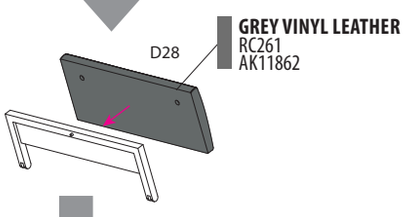


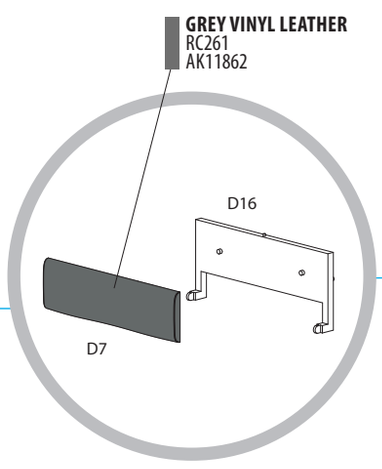


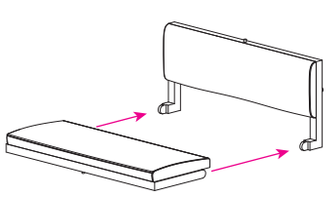

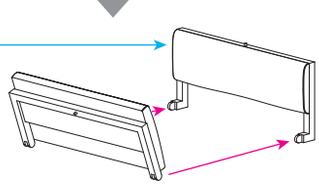

side view | *vista lateral*

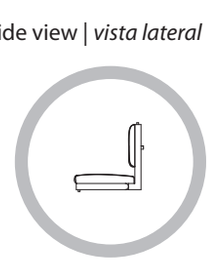

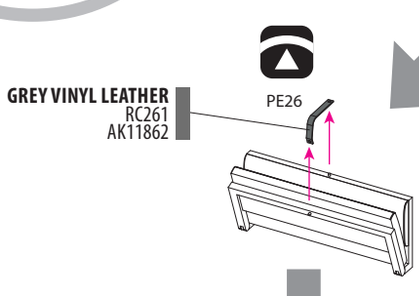


?

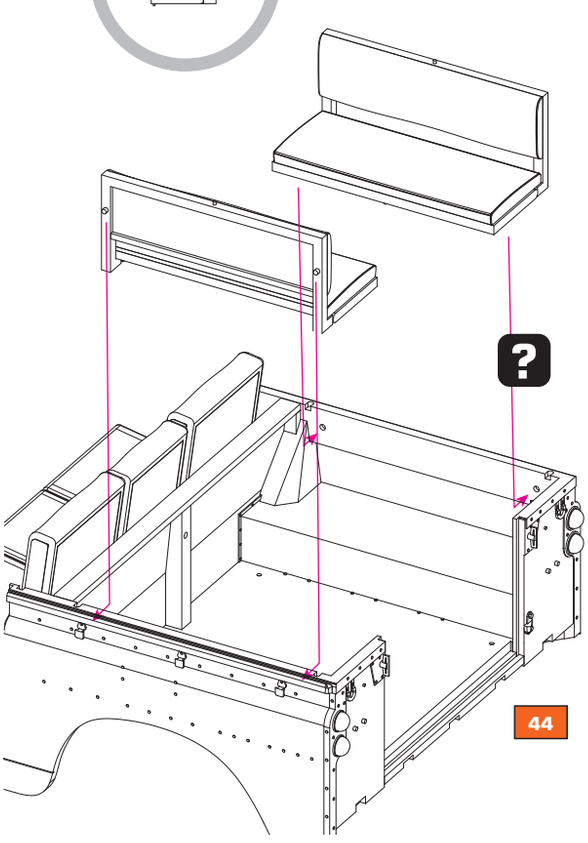


side view | *vista lateral*



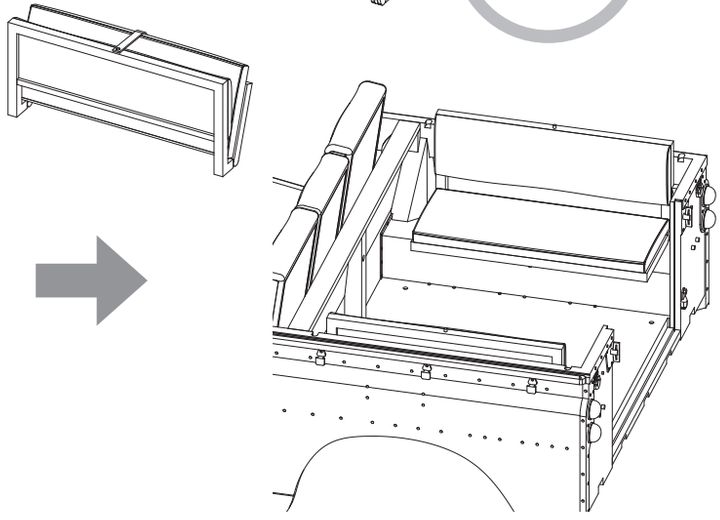

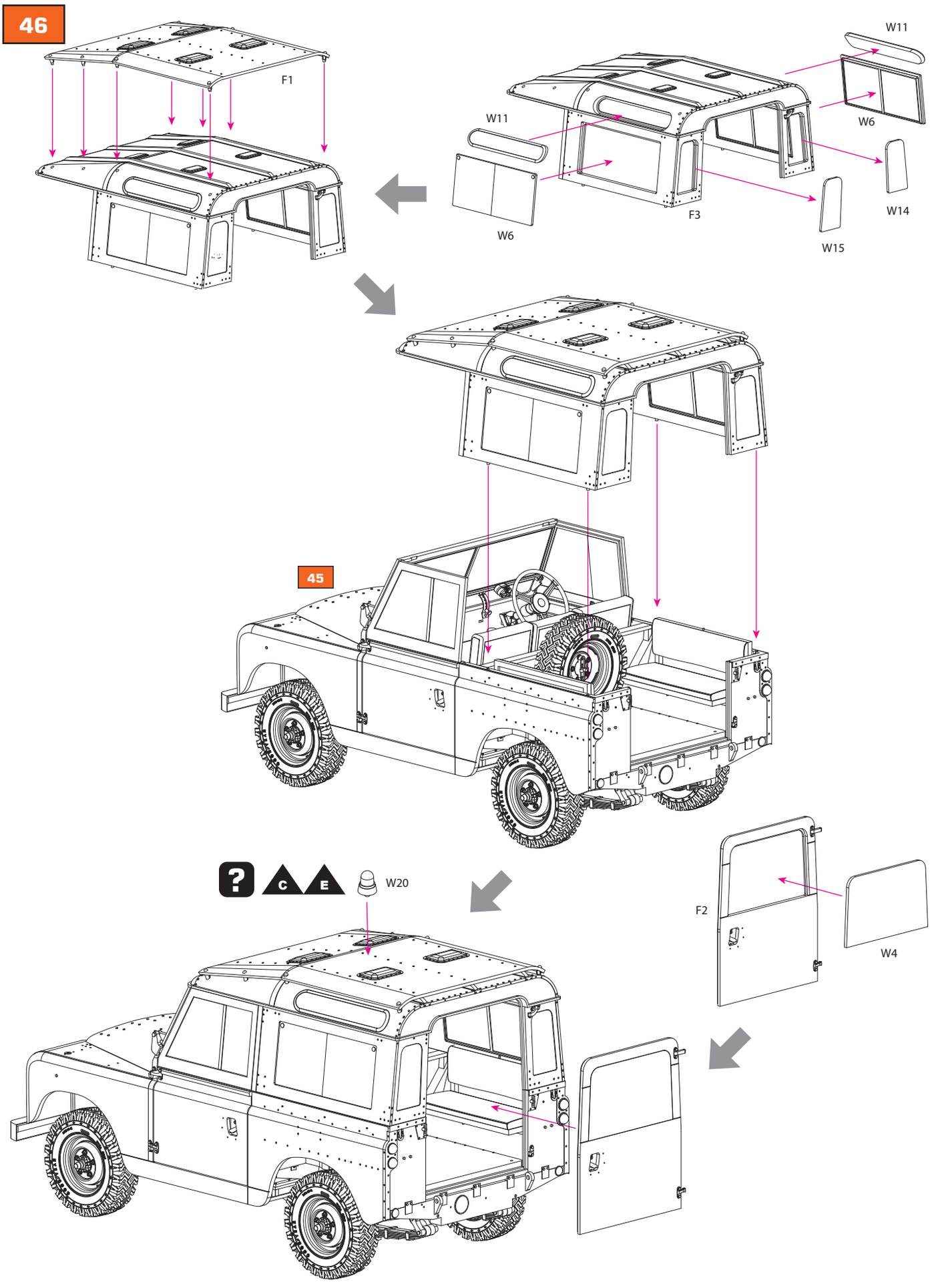
46
F1
W11
W11
W6
W6
F3
W14
W15
45
W20
F2
W4

## 47

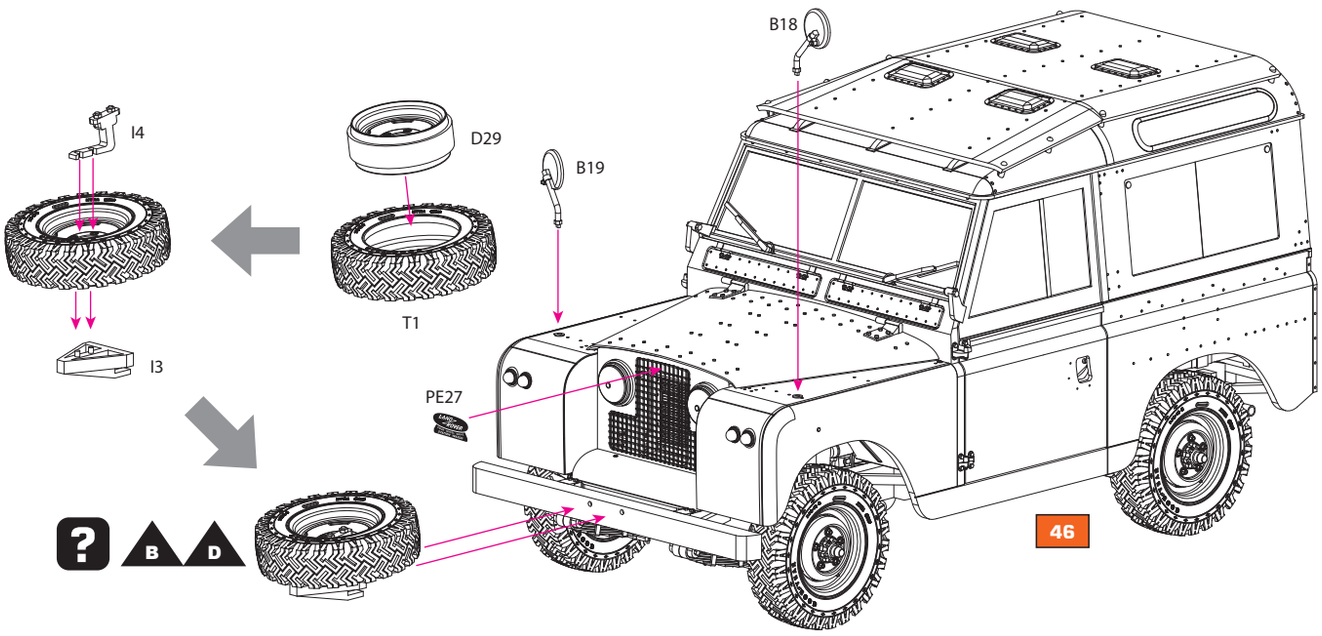
I4
D29
B19
B18
T1
I3
PE27
? B D
46

## 48 ?

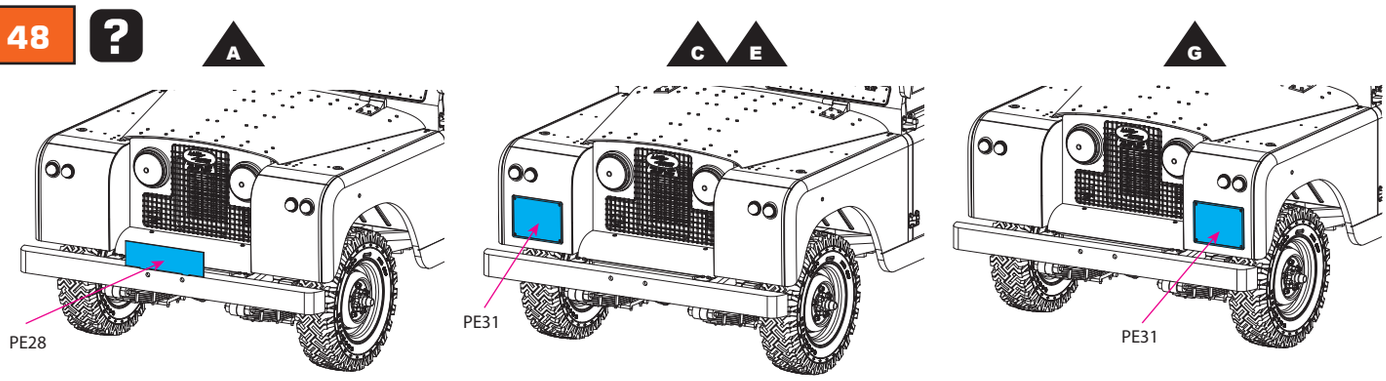
A
C E
G
PE28
PE31
PE31

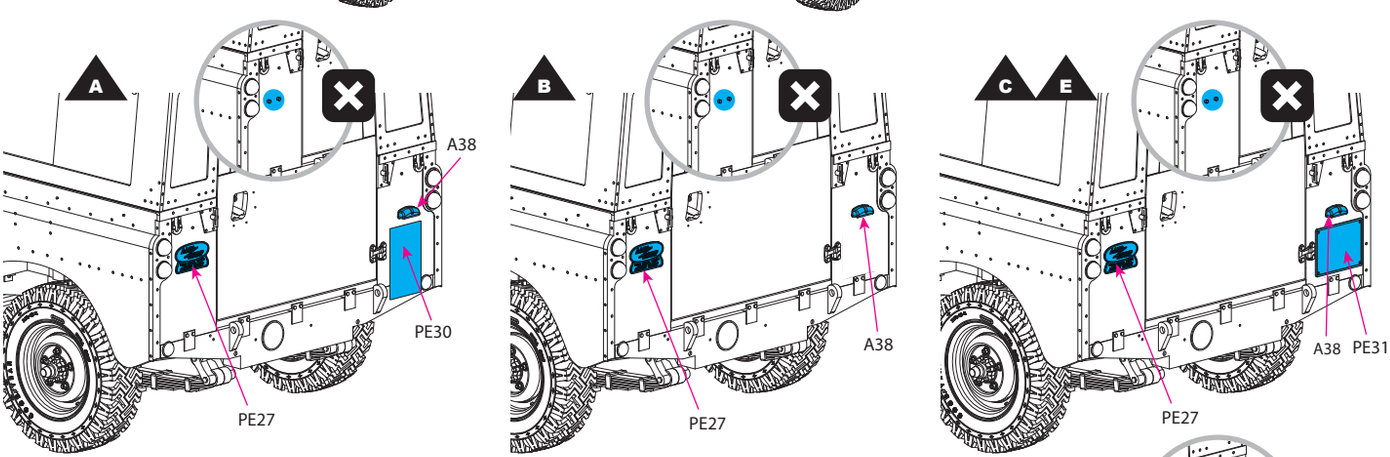
A
A38
PE30
PE27
B
A38
PE27
C E
A38 PE31
PE27

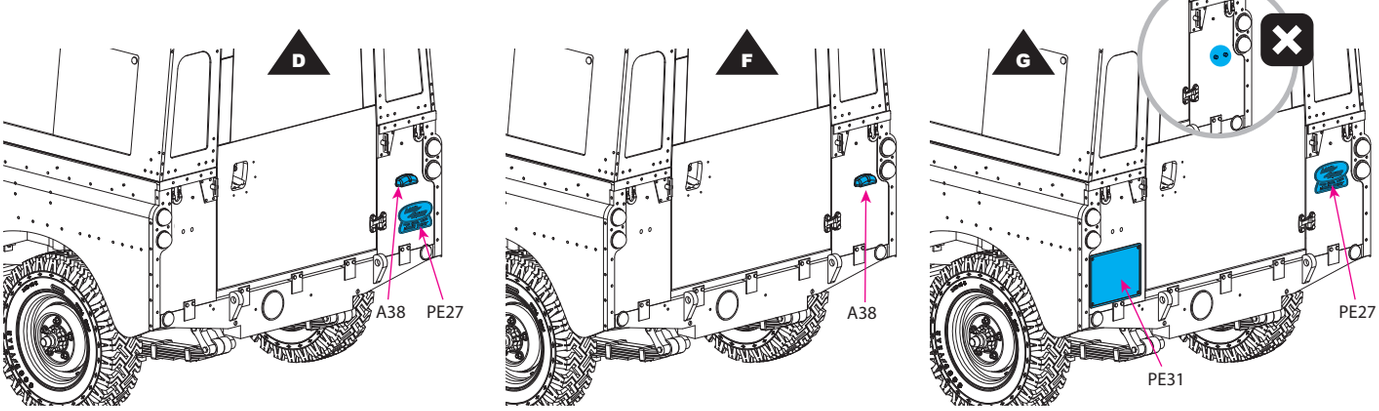
D
A38 PE27
F
A38
G
PE27
PE31

## A RAF Bomb Disposal, UK, 1966
***Artificieros de la RAF, Reino Unido, 1966***

### Paints
***Pinturas***

- **RAF BLUE-GREY** RC208 AK11167
- **SIGNAL RED** RC005 AK11089
- **MIDDLE GRAPHITE** RC257 AK11190
- **CLEAR ORANGE** RC506 AK11218
- **CLEAR RED** RC503 AK11213
- **TIRE BLACK** RC022 AK11027
- **STEEL** AK476
- **DARK IRON** AK486

### Recommended finishing products
***Productos recomendados para el acabado***

- **Overall wash | *Lavado general***
  AK677 Neutral Grey Wash
- **Dust | *Polvo***
  AK4062 Light Dust Deposit
- **Mud | *Barro***
  AK016 Fresh Mud
- **Streaking effects | *Efectos de escurrido***
  AK012 Streaking Grime
- **Oil | *Aceite***
  AK084 Engine Oil
- **Fuel | *Combustible***
  AK025 Fuel Stains

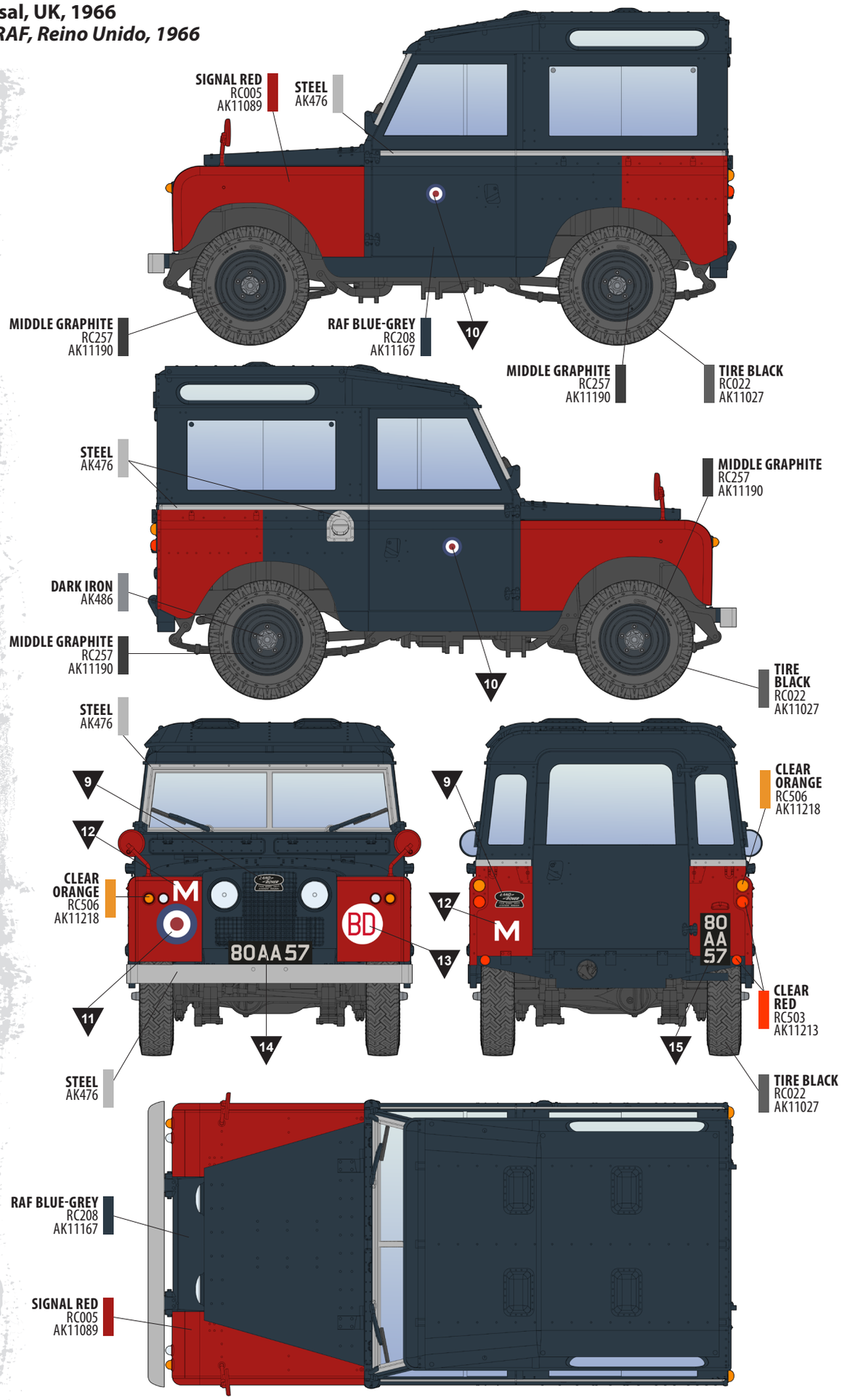

**B**

## Jordanian Army, Six Day War, Jerusalem, 1967
## *Ejército jordano, Guerra de los Seis Días, Jerusalén, 1967*

### Paints
### *Pinturas*

- **LIGHT STONE** RC040 AK11377
- **OLIVE GREEN** RC209 AK11874
- **LIMESTONE** RC222 AK11004
- **TIRE BLACK** RC022 AK11027
- **CLEAR ORANGE** RC506 AK11218
- **CLEAR RED** RC503 AK11213
- **STEEL** AK476
- **DARK IRON** AK486

### Recommended finishing products
### *Productos recomendados para el acabado*

- **Overall wash | *Lavado general***
  AK121 Wash for OIF & OEF
- **Rust | *Óxido***
  AK046 Light Rust Wash
- **Dust | *Polvo***
  AK4062 Light Dust Deposit
- **Mud | *Barro***
  AK016 Fresh Mud
- **Streaking effects | *Efectos de escurrido***
  AK123 Streaking Effects for OIF & OEF
- **Oil | *Aceite***
  AK084 Engine Oil
- **Fuel | *Combustible***
  AK025 Fuel Stains

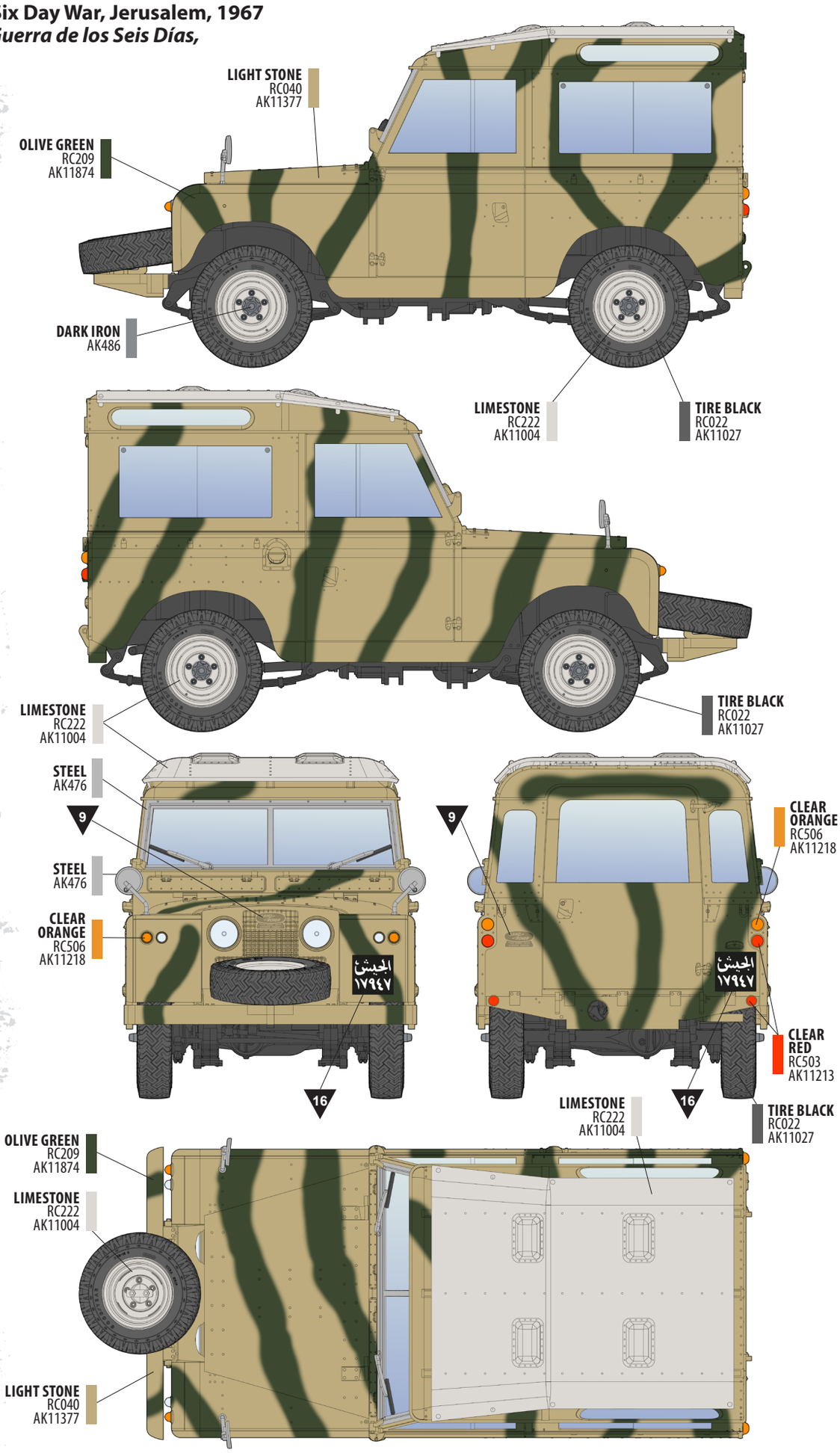

C

**British European Airways, Heathrow, UK, 1969**
***British European Airways, Heathrow, Reino Unido, 1969***

## Paints
## *Pinturas*

- **PACIFIC BLUE** RC011 AK11185
- **FLAT WHITE** RC004 AK11001
- **FLAT BLACK** RC001 AK11029
- **MIDDLE GRAPHITE** RC257 AK11190
- **CLEAR ORANGE** RC506 AK11218
- **CLEAR RED** RC503 AK11213
- **TIRE BLACK** RC022 AK11027

## Recommended finishing products
## *Productos recomendados para el acabado*

- **Overall wash | *Lavado general***
  AK677 Neutral Grey Wash
- **Dust | *Polvo***
  AK4062 Light Dust Deposit
- **Mud | *Barro***
  AK016 Fresh Mud
- **Streaking effects | *Efectos de escurrido***
  AK012 Streaking Grime
- **Oil | *Aceite***
  AK084 Engine Oil
- **Fuel | *Combustible***
  AK025 Fuel Stains

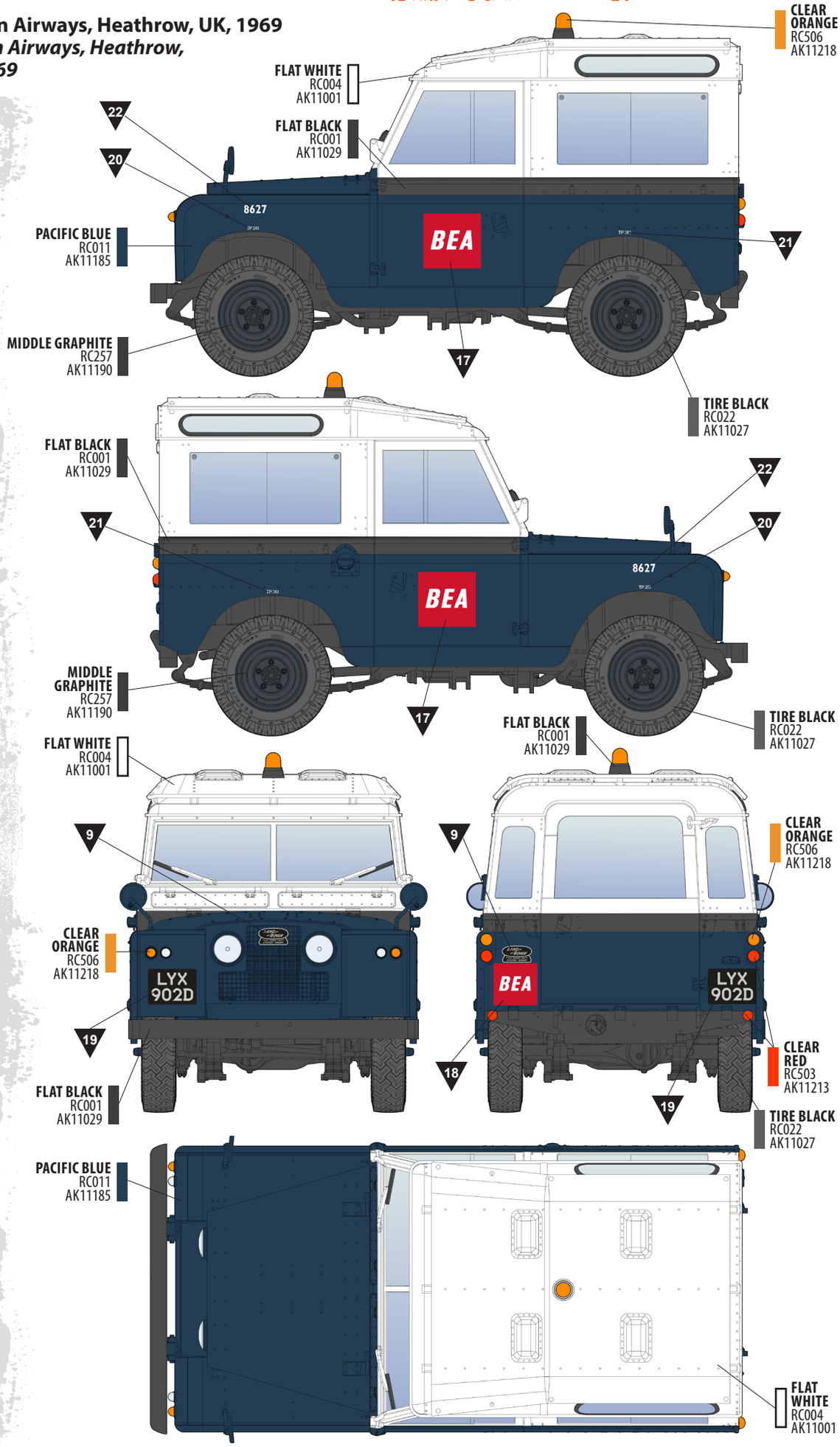

D

## Israeli Defence Forces, Yom Kippur War, Sinai Desert, 1973
***Fuerzas de Defensa Israelíes, Guerra de Yom Kippur, Desierto del Sinaí, 1973***

### Paints
### *Pinturas*

- **IDF EARLY SAND YELLOW** RC096 AK11354
- **LIMESTONE** RC222 AK11004
- **FLAT WHITE** RC004 AK11001
- **CLEAR ORANGE** RC506 AK11218
- **CLEAR RED** RC503 AK11213
- **TIRE BLACK** RC022 AK11027
- **STEEL** AK476
- **DARK IRON** AK486

### Recommended finishing products
### *Productos recomendados para el acabado*

- **Overall wash | *Lavado general***
  AK121 Wash for OIF & OEF
- **Rust | *Óxido***
  AK046 Light Rust Wash
- **Dust | *Polvo***
  AK4062 Light Dust Deposit
- **Mud | *Barro***
  AK016 Fresh Mud
- **Streaking effects | *Efectos de escurrido***
  AK123 Streaking Effects for OIF & OEF
- **Oil | *Aceite***
  AK084 Engine Oil
- **Fuel | *Combustible***
  AK025 Fuel Stains

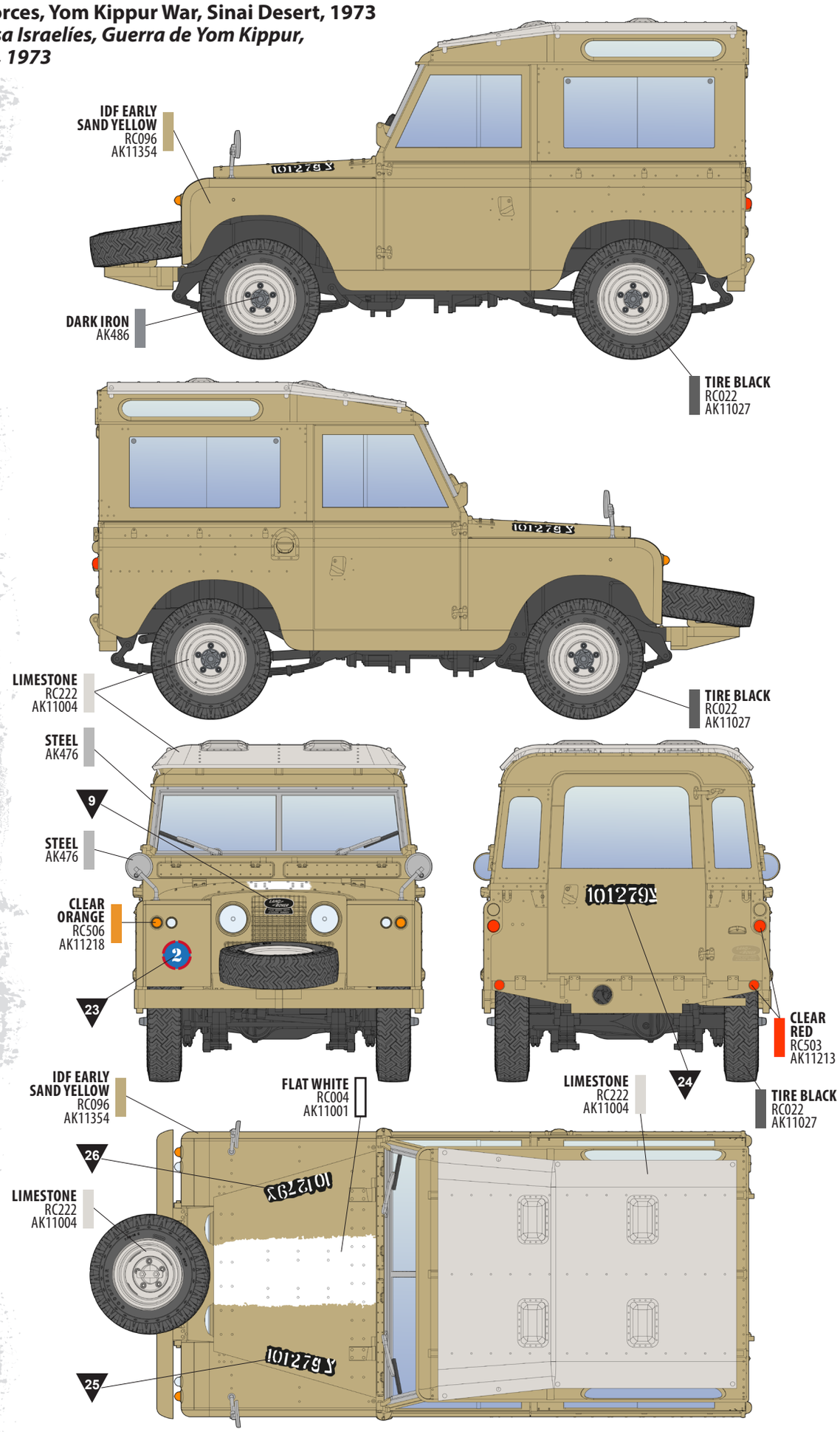

**E** **British European Airways, Heathrow, UK, 1973**
***British European Airways, Heathrow, Reino Unido, 1973***

## Paints
## *Pinturas*

- **RED** RC006 AK11090
- **FLAT WHITE** RC004 AK11001
- **MIDDLE GRAPHITE** RC257 AK11190
- **FLAT BLACK** RC001 AK11029
- **CLEAR ORANGE** RC506 AK11218
- **CLEAR RED** RC503 AK11213
- **TIRE BLACK** RC022 AK11027

## Recommended finishing products
## *Productos recomendados para el acabado*

- **Overall wash | *Lavado general***
  AK677 Neutral Grey Wash
- **Dust | *Polvo***
  AK4062 Light Dust Deposit
- **Mud | *Barro***
  AK016 Fresh Mud
- **Streaking effects | *Efectos de escurrido***
  AK012 Streaking Grime
- **Oil | *Aceite***
  AK084 Engine Oil
- **Fuel | *Combustible***
  AK025 Fuel Stains

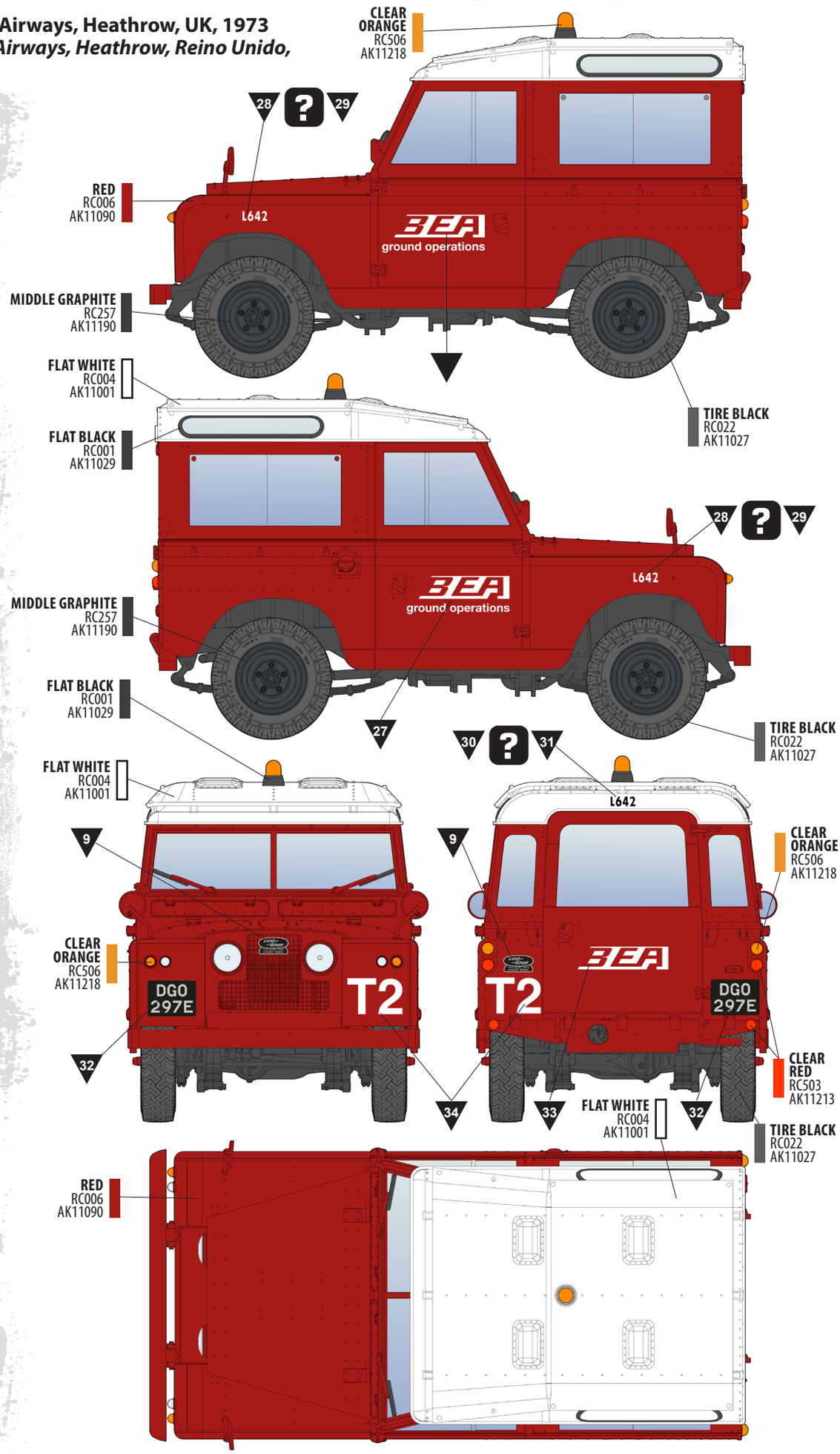

## F Israeli Defence Forces, Op. Peace for Galilee, Lebanon, 1982
***Fuerzas de Defensa de Israel, op. Paz para Galilea, Líbano, 1982***

### Paints
### *Pinturas*

- **IDF SAND GREY 1970S-1980S** RC095 AK11353
- **LIMESTONE** RC222 AK11004
- **CLEAR ORANGE** RC506 AK11218
- **CLEAR RED** RC503 AK11213
- **TIRE BLACK** RC022 AK11027
- **STEEL** AK476
- **DARK IRON** AK486

### Recommended finishing products
### *Productos recomendados para el acabado*

- **Overall wash | *Lavado general***
  AK121 Wash for OIF & OEF
- **Rust | *Óxido***
  AK046 Light Rust Wash
- **Dust | *Polvo***
  AK4062 Light Dust Deposit
- **Mud | *Barro***
  AK016 Fresh Mud
- **Streaking effects | *Efectos de escurrido***
  AK123 Streaking Effects for OIF & OEF
- **Oil | *Aceite***
  AK084 Engine Oil
- **Fuel | *Combustible***
  AK025 Fuel Stains

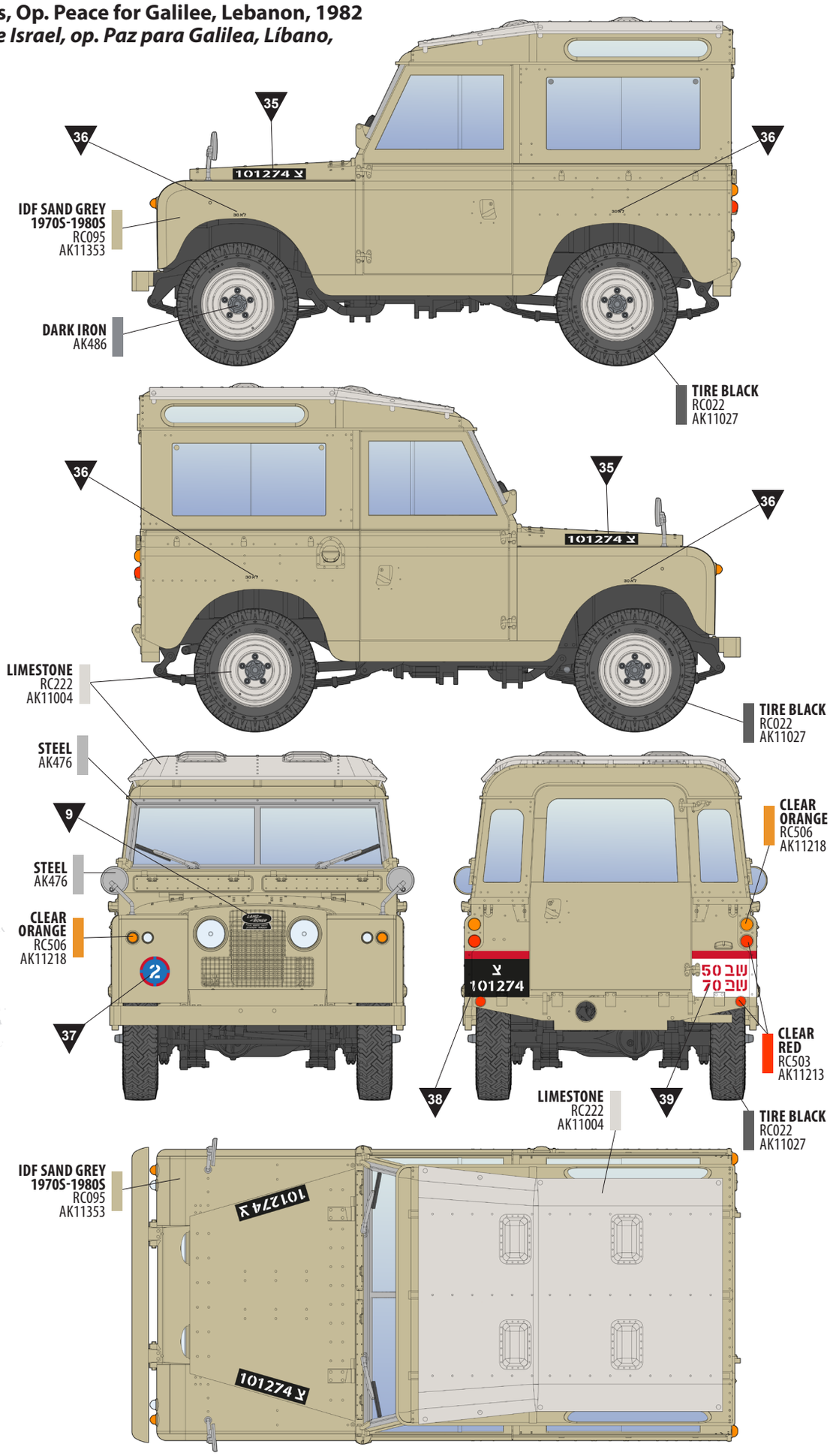

## G Lebanese Army Recovery Service, Lebanon, 1970s

***Servicio de Recuperación del Ejército Libanés, Líbano, años 70***

### Paints
### *Pinturas*

- **PALE BLUE** RC240 AK11161
- **CLEAR ORANGE** RC506 AK11218
- **CLEAR RED** RC503 AK11213
- **TIRE BLACK** RC022 AK11027

### Recommended finishing products
### *Productos recomendados para el acabado*

- **Overall wash | *Lavado general***
  AK677 Neutral Grey Wash
- **Rust | *Óxido***
  AK046 Light Rust Wash
- **Dust | *Polvo***
  AK4062 Light Dust Deposit
- **Mud | *Barro***
  AK016 Fresh Mud
- **Streaking effects | *Efectos de escurrido***
  AK012 Streaking Grime
- **Oil | *Aceite***
  AK084 Engine Oil
- **Fuel | *Combustible***
  AK025 Fuel Stains

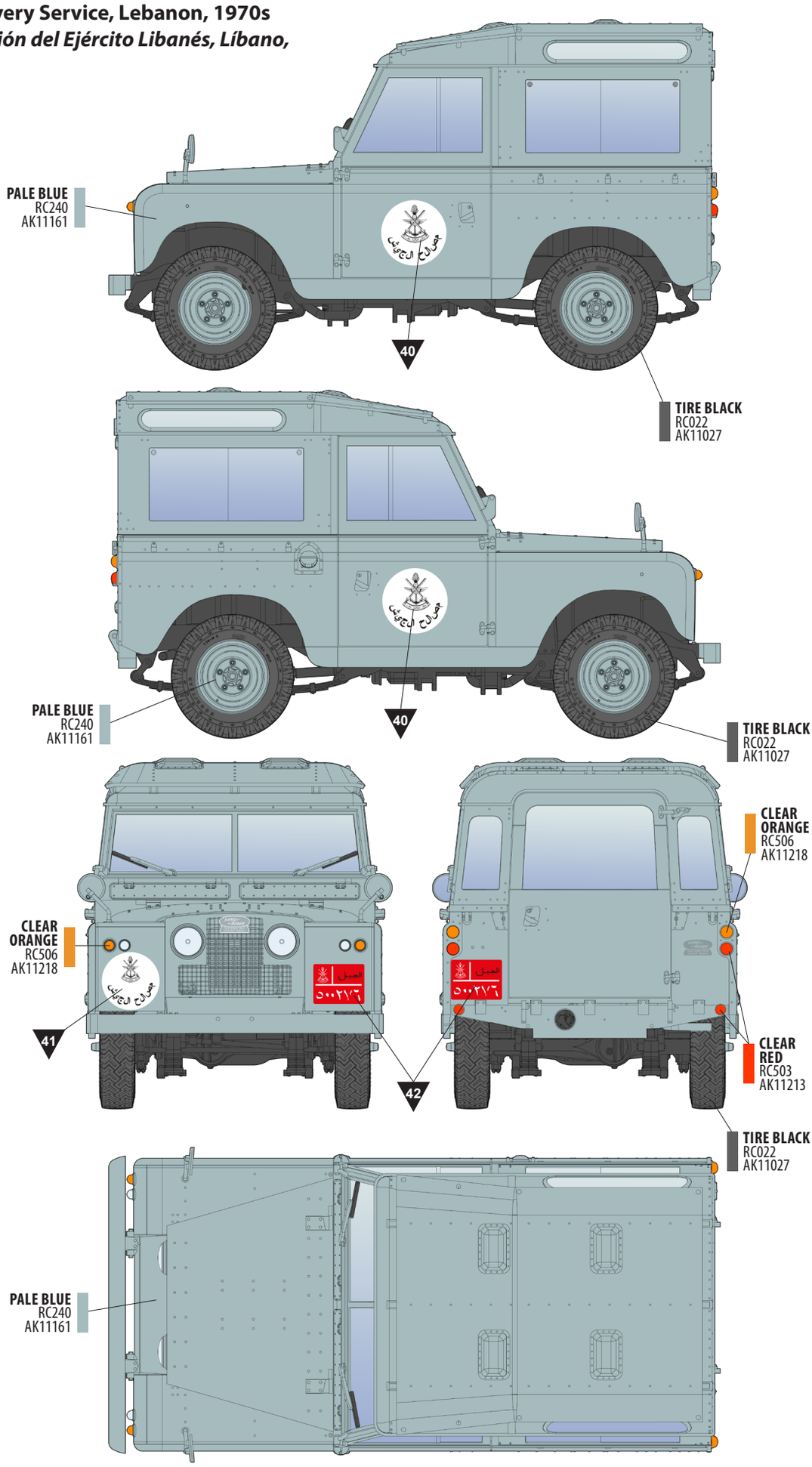



AK-INTERACTIVE.COM